Dedicated to our parents, with gratitude

Short-lived Radioactive Gases for Clinical Use

J. C. CLARK, BSc

and

P. D. BUCKINGHAM, AIST

Medical Research Council, Cyclotron Unit, Hammersmith Hospital, London

BUTTERWORTHS
London and Boston

THE BUTTERWORTH GROUP

ENGLAND
Butterworth & Co (Publishers) Ltd
London: 88 Kingsway, WC2B 6AB

AUSTRALIA
Butterworths Pty Ltd
Sydney: 586 Pacific Highway, NSW 2067
Melbourne: 343 Little Collins Street, 3000
Brisbane: 240 Queen Street, 4000

CANADA
Butterworth & Co (Canada) Ltd
Toronto: 2265 Midland Avenue,
Scarborough, Ontario, M1P 4S1

NEW ZEALAND
Butterworths of New Zealand Ltd
Wellington: 26–28 Waring Taylor Street, 1

SOUTH AFRICA
Butterworth & Co (South Africa) (Pty) Ltd
Durban: 152–154 Gale Street

USA
Butterworth
161 Ash Street
Reading, Mass. 01867

All rights reserved. No part of this publication may be reproduced or transmitted in any form or by any means, including photocopying and recording, without the written permission of the copyright holder, application for which should be addressed to the publisher. Such written permission must also be obtained before any part of this publication is stored in a retrieval system of any nature.

First published 1975

Suggested U.D.C. Number: 616–073·916·73
Suggested additional U.D.C. Numbers: 621·039·85: 616 073
621·384·6: 616–073

© Butterworth & Co (Publishers) Ltd. 1975

ISBN 0 407 39770 1

Printed by Thomson Litho, East Kilbride, Scotland

Contents

Foreword by John B. West, Professor of Medicine, University of Southern California ix

Preface xi

1. INTRODUCTION

1.1 History 1
1.2 Elements of nuclear physics 2
1.3 Radionuclide production 11
1.4 Factors determining the use of short-lived radioactive gases 14
1.5 Short-lived radioactive gases in clinical diagnosis 17

2. THE PRODUCTION OF SHORT-LIVED RADIOACTIVE GASES

2.1 Methods of production 19
2.2 Cyclotron targets for short-lived radioactive gas production 20
2.3 Target efficiency measurements 35
2.4 Cyclotron beam current and beam distribution measurement 39

3. THE PROCESSING OF SHORT-LIVED RADIOACTIVE GASES

3.1 Introduction 46
3.2 Contaminants 46

THE BUTTERWORTH GROUP

ENGLAND
Butterworth & Co (Publishers) Ltd
London: 88 Kingsway, WC2B 6AB

AUSTRALIA
Butterworths Pty Ltd
Sydney: 586 Pacific Highway, NSW 2067
Melbourne: 343 Little Collins Street, 3000
Brisbane: 240 Queen Street, 4000

CANADA
Butterworth & Co (Canada) Ltd
Toronto: 2265 Midland Avenue,
Scarborough, Ontario, M1P 4S1

NEW ZEALAND
Butterworths of New Zealand Ltd
Wellington: 26–28 Waring Taylor Street, 1

SOUTH AFRICA
Butterworth & Co (South Africa) (Pty) Ltd
Durban: 152–154 Gale Street

USA
Butterworth
161 Ash Street
Reading, Mass. 01867

All rights reserved. No part of this publication may be reproduced or transmitted in any form or by any means, including photocopying and recording, without the written permission of the copyright holder, application for which should be addressed to the publisher. Such written permission must also be obtained before any part of this publication is stored in a retrieval system of any nature.

First published 1975

Suggested U.D.C. Number: 616–073·916·73
Suggested additional U.D.C. Numbers: 621·039·85: 616–073
621·384·6: 616–073

© Butterworth & Co (Publishers) Ltd. 1975

ISBN 0 407 39770 1

Printed by Thomson Litho, East Kilbride, Scotland

Contents

Foreword by John B. West, Professor of Medicine, University of Southern California ix

Preface xi

1. INTRODUCTION

1.1 History 1
1.2 Elements of nuclear physics 2
1.3 Radionuclide production 11
1.4 Factors determining the use of short-lived radioactive gases 14
1.5 Short-lived radioactive gases in clinical diagnosis 17

2. THE PRODUCTION OF SHORT-LIVED RADIOACTIVE GASES

2.1 Methods of production 19
2.2 Cyclotron targets for short-lived radioactive gas production 20
2.3 Target efficiency measurements 35
2.4 Cyclotron beam current and beam distribution measurement 39

3. THE PROCESSING OF SHORT-LIVED RADIOACTIVE GASES

3.1 Introduction 46
3.2 Contaminants 46

3.3 The transmission and filtration of gases 56
3.4 The measurement and control of gas pressure and flow rate 61
3.5 Furnaces, absorbers and cold traps 64
3.6 Radioactive concentration and specific activity 71
3.7 Yield measurement 73
3.8 The remote control of equipment 85
3.9 Waste gas disposal 86
3.10 Sweep gases and gas mixing 88
3.11 Design, preparation and construction techniques for radioactive gas processing systems 93

4. DISPENSING AND CLINICAL FACILITIES

4.1 Dispensing 104
4.2 Clinical facilities 108

5. OXYGEN-15

5.1 Introduction 122
5.2 Target design 123
5.3 Sweep/target gases, yields and irradiation conditions 127
5.4 ^{15}O production systems 136

6. NITROGEN-13

6.1 Introduction 171
6.2 Target systems 172
6.3 $^{13}N_2$ production systems 191

7. CARBON-11

7.1 Introduction 215
7.2 Target systems 216
7.3 ^{11}CO production systems 227
7.4 $^{11}CO_2$ production systems 237
7.5 Other ^{11}C production systems 244
7.6 ^{11}C storage systems 246
7.7 Red cell labelling with ^{11}CO 253
7.8 ^{11}C production system selection 256

8. RARE GASES

8.1 Introduction 261
8.2 Krypton-79 263
8.3 Krypton-85m 270
8.4 Krypton-81m 283
8.5 Xenon-135 and xenon-127 305

9. SAFETY PRECAUTIONS

9.1 Introduction 313
9.2 Radiation hazards 313
9.3 Chemical hazards 316
9.4 Electrical hazards 318
9.5 Mechanical hazards 319
9.6 Leaks and leak testing 319
9.7 Conclusion 321

Appendices 323

Glossary of terms 338

Useful conversion factors and data 342

Index 343

Foreword

It is a remarkable coincidence that the three components of the respiratory gases oxygen, carbon dioxide and nitrogen are available labelled with short-lived radioactive isotopes. The half-lives of oxygen-15, carbon-11 and nitrogen-13 are approximately 2, 20 and 10 minutes respectively and these nuclides together with several others in the rare gas series form a versatile group of radioactive labels with some remarkable features for medical research.

The short physical (and therefore biological) half-life means that the cumulative radiation dose per unit of administered radioactivity is low. Thus astonishingly large amounts of radioactivity can be injected or inhaled into the body giving very high counting rates and allowing rapid dynamic processes to be followed. For example, one of the first uses of oxygen-15 was to follow the removal rate of $C^{15}O_2$ from specific regions of the lung during a few seconds of breathholding after a single inspiration of this gas. This demonstrated striking topographical differences in pulmonary blood flow and these have subsequently been shown to have many important implications in disease. In addition, these nuclides can be used to label blood at high activities (for example as ^{11}CO or $C^{15}O$) and thus studies of blood flow in a variety of organs are possible. A further advantage is that many of these nuclides are positron emitters so that coincidence counting can be used with its high inherent resolution.

If these nuclides are so versatile, why are they not used more extensively? The answer is the considerable difficulties of producing them continuously as is required by their short half-lives. In practice this means a dedicated cyclotron near facilities for clinical investigation. Although the cost of such an installation is not prohibitive by modern standards in medical research, its effective use requires a great deal of planning. For example it is essential that several teams of investigators have ready access to such a facility in order for it to be used efficiently. Otherwise there is a danger that any one

investigator will be under pressure to use the cyclotron and thus have a machine influence the direction of his research.

It is a tribute to the farsightedness of the Medical Research Council that the facilities of the Cyclotron Unit (and the Radiotherapeutic Research Unit before it) at Hammersmith Hospital were not only the first in this field but remain the best. By a happy compromise, the Unit has maintained an academic air which has allowed the continuous development of new methods in this sophisticated area while at the same time it has made these techniques available to a variety of clinical investigators. This monograph contains much of the original work on the preparation and processing of these short-lived isotopes. It is a pleasure to acknowledge my ten-year association with this stimulating group and to wish this monograph well.

La Jolla, California — John B. West, MD, PhD

Preface

During the past decade the short-lived radioactive gas has become of increasing importance in clinical diagnosis. It offers a quick and safe method of investigating disease and malfunction of the respiratory and circulatory systems, measuring blood volumes and flow rates, and determining the position and performance of organs with blood pools.

This book has been written for those having an interest in the use of radioactive tracers in clinical diagnosis, but with little or no experience in the handling of radioactive gases. It does not attempt to cover every possible use (indeed new applications are continually being found), but it is hoped that the more important ones are included.

Whilst the clinical results of the uses of short-lived radioactive gases are well documented, very little has been published about the technological aspects, and it is with this in mind that this monograph has been written. It is intended to cover the general principles of the production, processing and dispensing of short-lived radioactive gases. Specific examples are related to the use of the Medical Research Council's cyclotron at Hammersmith Hospital where much of the original work was pioneered in close co-operation with the Postgraduate Medical School of the University of London.

No book of this kind is written without the encouragement and co-operation of one's colleagues. In particular we would like to express our gratitude to the Director of the Medical Research Council Cyclotron Unit, Mr D. D. Vonberg, for his permission to write this monograph and for his continual encouragement throughout its preparation. We are also greatly indebted to Dr D. J. Silvester, Professor J. B. West and Professor C. T. Dollery, whose foresight and enthusiasm made the work possible.

Other colleagues to whom we are indebted for valuable discussions and suggestions concerning both the theoretical and practical aspects of the work, include Mr I. A. Watson, Mr L. C. Baker,

Mr T. Jones, Miss Rosemary Arnot, Mr G. J. Batra, Dr J. M. B. Hughes, Mr G. Burton, Dr D. K. Bewley, Dr A. J. Palmer, Dr. H. I. Glass, Mr G. R. Forse, Mr C. G. Rhodes, Professor J. F. Fowler and Professor Yukio Murakami. We also gratefully acknowledge the continual co-operation of Mr J. Sharp and the team of cyclotron operators without which none of the work would have been possible. Much of the targetry and other equipment construction was carried out by Mr L. W. Brown and Mr W. Edwards. We are also indebted to Mr P. L. Horlock, Mr B. T. Hine, Mr P. Ashton and Mr F. Paice for valuable technical assistance with much of the experimental work, and to Dr S. L. Waters and Dr M. L. Thakur for their help with spectrometric and analytical measurements.

Many people helped with the preparation of the manuscript. Much of the original typescript was prepared by Mrs Eileen Gillmore to whom we are most grateful. The completion of the manuscript was due to the continued and patient efforts of Mrs Valerie Diaz, Mrs Frances Westbrook, Mrs Sylvia Goodall, Mrs Christine Didcock and Mrs Patricia Robinson to whom we express our sincere thanks. We are also greatly indebted to Mr K. Finding for his preparation of the isometric illustrations, to Sheila Webster for her accurate and painstaking preparation of the graphs and line drawings used throughout the work, and to Mr M. Ealy for additional graphical assistance.

Finally we wish to acknowledge the part played by our wives, Patricia Clark and Audrey Buckingham, whose continued patience, insight and encouragement have helped us to make this monograph a reality.

J. C. C.
P. D. B.

Introduction

1.1 HISTORY

Why have radioactive gases become of such value in clinical diagnosis? What is meant by the term 'short-lived radioactive gas'? How are such gases made and used? These are some of the questions that this book is intended to answer.

Before dealing in detail with radioactive gases as such, we would do well to consider the basic nature of artificially produced radioisotopes and briefly the development of the machines in which they are made.

It may be said that one of the most significant advances in nuclear science was made in 1930 when E. O. Lawrence and his associates built the first operational cyclotron at the University of California, Berkeley. With his cyclotron Lawrence was able to demonstrate nuclear transformation, a discovery which was to result in the large-scale use of radioisotopes in medicine, industry, agriculture and science. By 1939 cyclotrons were being used in many parts of the world for the production of a wide range of radioisotopes. One of the main limitations of the cyclotron, however, is its inability to produce large quantities of radioactive material. Only one or two radioisotopes are made at a time resulting in high production costs. Thus the development of the nuclear reactor in 1942 by Fermi and his colleagues at the University of Chicago was seen by many to be the answer to the problem of limited radioisotope production. Using a reactor it is possible to make large quantities of several different radioisotopes simultaneously at a relatively low cost compared with those made on a cyclotron. As with the cyclotron, so the nuclear reactor was developed so that today, both are used extensively for radioisotope production.

The cyclotron and nuclear reactor may be considered as being complementary. The cyclotron produces limited amounts of a wide range of radioisotopes; the reactor produces large quantities of a more limited range of radioisotopes.

At about the same time as the invention of the cyclotron, the Van de Graaff accelerator was developed by the person so named. Although not as powerful as the cyclotron, it is capable of producing small amounts of radioisotopes.

The cyclotron, the nuclear reactor and to a lesser extent the Van de Graaff accelerator, are used for the production of radioactive gases.

1.2 ELEMENTS OF NUCLEAR PHYSICS

1.2.1 Atoms

All matter consists of atoms. Each atom has at its centre a nucleus consisting of protons and neutrons, collectively called nucleons. Orbiting the nucleus are electrons. The size of an atom is approximately the diameter of the orbit of the outermost electrons, about 10^{-8} cm. Most of the volume occupied by an atom consists of empty space. Nuclei are between 10^{-12} and 10^{-13} cm in diameter. On a more comprehensible scale, if the nucleus were one centimetre diameter, the atom would be about 500 metres across.

Electrons are very light compared with protons or neutrons; about 99.9 per cent of the mass of an atom is in the nucleus. Being negatively charged, the orbiting electrons maintain their positions by the equal but positive charge of the protons in the nucleus. Neutrons have no charge.

Since the atom is electrically neutral the number of orbiting electrons is equal to the number of protons. This number, called the *atomic number* is represented by the letter Z. The electrons can be thought of as orbiting the nucleus in a series of 'shells' of increasing diameter, the shell closest to the nucleus being termed the K shell, the next outermost, the L shell and so on. The maximum number of electrons in the K, L, M and N shells is 2, 8, 18 and 32 respectively. The chemical properties of all elements depend upon the number of orbital electrons in their atoms. Consequently it may be said that the number of electrons or atomic number Z identifies the element.

1.2.2 Nuclides and Isotopes

We have seen that the chemical properties of a given atom are dependent upon the number of electrons orbiting the nucleus. Since

the neutrons in the nucleus have no effect upon the charge and consequently no effect upon the required number of electrons, some of the atoms of a given element may have different numbers of neutrons from other atoms of the same element. We designate the *number of neutrons* in an atom by the letter N. We see therefore that the atoms of a given chemical element have the same atomic number Z, but may have different values of N.

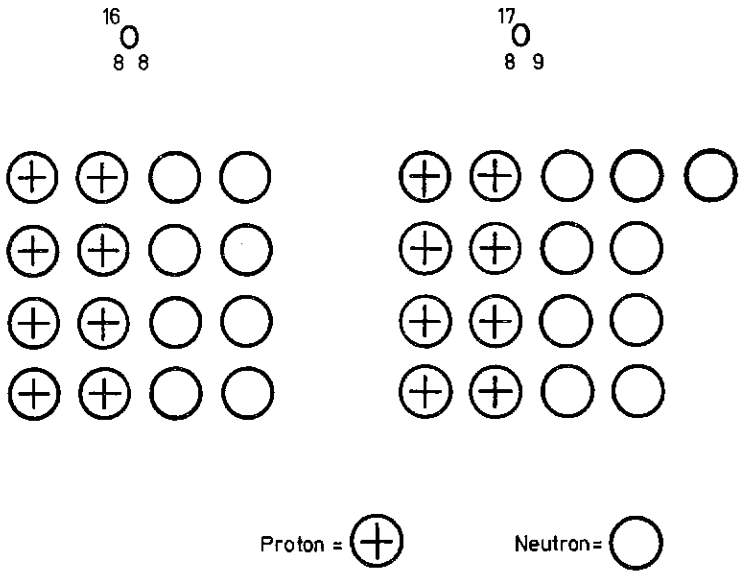

Figure 1.1 Schematic representation of ^{16}O and ^{17}O nuclei

The total mass of a nucleus is effectively the sum of the masses of Z protons and N neutrons. This total mass is known as the *atomic mass*, A; i.e. $A = Z + N$.* Thus a nucleus is identified by its values of A and Z. Nuclei with various values of A are known as *nuclides*.

For example, an atom having a nucleus consisting of eight protons and eight neutrons will be referred to as oxygen-16, i.e. $A = Z + N = 8 + 8 = 16$. Since we have seen that the number of neutrons can be different for the same element, we can consider an oxygen atom having eight protons and nine neutrons, i.e. $A = Z + N = 8 + 9 = 17$. Such an atom would be referred to as oxygen-17 (*Figure* 1.1). These atoms, oxygen-16 and oxygen-17 are called *isotopes* of oxygen, an

* See section 1.3 (page 11) with reference to mass defect.

isotope being defined as an atomic species of the same atomic number Z, that is belonging to the same element but having different mass numbers A.

A nuclide is written symbolically thus: ${}^{A}_{Z}X_{N}$ where X is the element concerned. Oxygen-16 would therefore be written as ${}^{16}_{8}O_{8}$, and oxygen-17, ${}^{17}_{8}O_{9}$. Often the values of Z and N are omitted so that we have the simplified forms, ${}^{16}O$ and ${}^{17}O$ or O^{16} and O^{17}.

It is important to note that all the isotopes of a given element have identical chemical properties. The element hydrogen has only three isotopes; other elements such as mercury and tin have 22 and 24 isotopes respectively. Most elements have both stable and radioactive isotopes.

1.2.3 Radioactivity

A stable nuclide is one in which the number of protons and neutrons of its constituent atoms never changes. It is not radioactive and emits no energy of any kind. In order that stability may be maintained, the ratio of protons to neutrons must lie around a certain value. For very light atoms the ratio is 1:1, for atoms in the middle of the periodic table it is about 1:1.3 and for heavy elements it is about 1:1.6. If there is any marked deviation from the stable ratio, changes will take place within the nucleus in order that a more stable ratio may be achieved. Radiation is emitted as this happens and the atom is said to be radioactive and is called a *radionuclide*, or a *radioisotope* of the element concerned.

Radionuclides such as uranium, thorium and radium occur naturally and are therefore known as natural radionuclides, or natural radioisotopes of these elements. However, by using powerful devices such as the cyclotron, the nuclear reactor and Van de Graaff accelerator it is possible to alter the number of nucleons present in the atoms of any given element, thus causing them to become unstable and therefore radioactive. Such nuclides are called *artificial radionuclides*. Many of these may be incorporated in radioactive gases, some of which are of value in clinical diagnosis. The kinds of emission that radionuclides can exhibit are alpha, beta, gamma and x-radiation, or frequently a combination of these. The nucleus is known as the parent nucleus before, and the daughter nucleus after the change of nucleons. The transition is known as *radioactive decay* or *disintegration* of the nucleus.

1.2.4 Alpha Emission

Alpha particles (α particles) consist of two protons and two neutrons, are thus positively charged and are generally only emitted

by the heavier elements. When a nucleus emits an alpha particle, its charge Z is reduced by two and its mass number A by four. The resultant nucleus is that of an atom of a different element. An example is the alpha disintegration of uranium-238 to give thorium-234. The decay process is written:

$$ {}^{238}_{92}U_{146} \xrightarrow{\alpha} {}^{234}_{90}Th_{144} $$

Since an alpha particle consists of two protons and two neutrons (A = 4, Z = 2), it is effectively the nucleus of a helium atom. Thus the above decay process may also be written:

$$ {}^{238}_{92}U_{146} \longrightarrow {}^{234}_{90}Th_{144} + {}^{4}_{2}He_{2} $$

Alpha particles are heavily ionizing and not very penetrating; a sheet of paper easily stops them. Although emitted by many radioactive elements, alpha particles are of little value in clinical diagnosis. None of the radioactive gases with which we are concerned exhibits alpha emission.

1.2.5 Beta Emission

Beta emission is the commonest form of radioactive decay. Beta particles (β particles) are high speed electrons and may be either negatively or positively charged. Negatively charged β particles (β^- particles or electrons) are emitted from the nucleus when a neutron

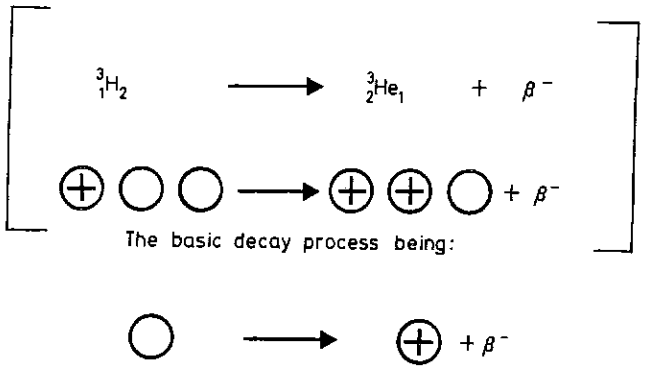

Figure 1.2 (a) Schematic representation of decay by β^- emission

'changes' into a proton, the atomic number Z being increased by one, the mass number A remaining unchanged. The resultant atom is that of a different element—in fact the next highest element in the periodic table (*Figure 1.2a*).

An example of β^- emission is the disintegration of tritium, ${}^3_1H_2$, to form an isotope of helium, ${}^3_2He_1$ (*Figure 1.2a*). This decay process may be written:

$$ {}^3_1H_2 \xrightarrow{\beta^-} {}^3_2He_1 \quad \text{or} \quad {}^3_1H_2 \longrightarrow {}^3_2He_1 + \beta^- $$

This decay process is shown in the form of a *decay scheme* in *Figure 1.2 (b)*.

Positively charged β particles (β^+ particles or positrons) are emitted from the nucleus following the 'change' of a proton into a neutron. In this case the atomic number Z is reduced by one, the mass number A again remaining unchanged. The result is the formation of an atom of the next lowest element in the periodic table (*Figure 1.3a*).

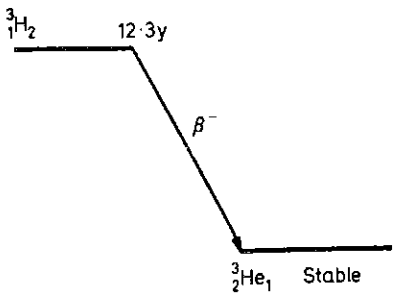

Figure 1.2 (b) Simplified decay scheme for ${}^3H$

β^+ particles are emitted when for example, the oxygen isotope ${}^{15}_8O_7$ changes into the nitrogen isotope ${}^{15}_7N_8$ (*Figure 1.3a*). Such a decay process is written:

$$ {}^{15}_8O_7 \xrightarrow{\beta^+} {}^{15}_7N_8 \quad \text{or} \quad {}^{15}_8O_7 \longrightarrow {}^{15}_7N_8 + \beta^+ $$

The decay scheme of this decay process is shown in *Figure 1.3 (b)*.

Sometimes either β^+ or β^- particles may be emitted following disintegration of the atom. For instance ${}^{64}_{29}Cu_{35}$ changes to either ${}^{64}_{28}Ni_{36}$ or ${}^{64}_{30}Zn_{34}$ as follows:

$$ {}^{64}_{29}Cu_{35} \longrightarrow {}^{64}_{28}Ni_{36} + \beta^+ \quad \text{and} \quad {}^{64}_{29}Cu_{35} \longrightarrow {}^{64}_{30}Zn_{34} + \beta^- $$

(x-rays due to electron capture, and gamma rays are also emitted.)

β-particles vary widely in energy. However, all but the most energetic are absorbed by a millimetre of copper or one or two metres of air. Most of the radioactive gases that we shall be considering decay by emitting either β^- or β^+ particles.

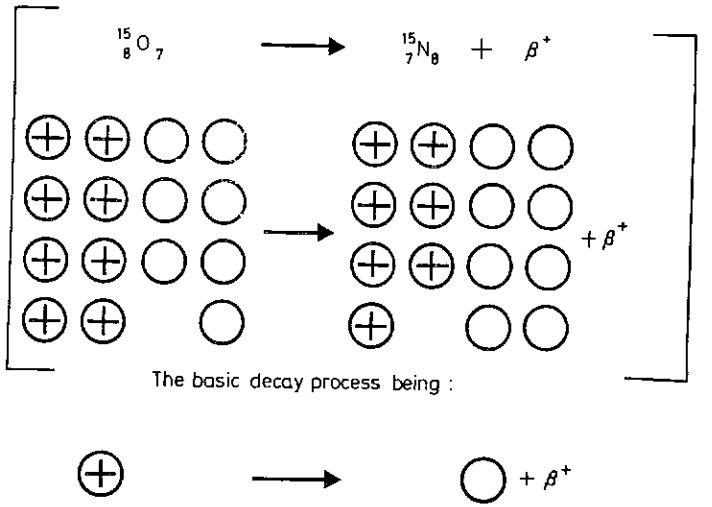

Figure 1.3 (a) Schematic representation of decay by β^+ emission

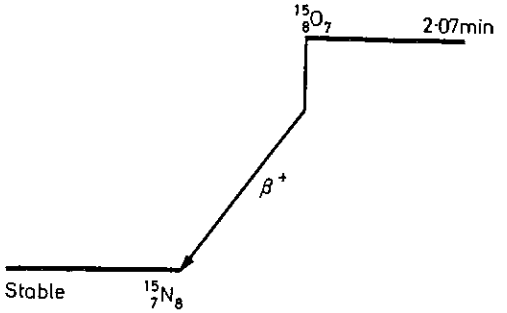

Figure 1.3 (b) Simplified decay scheme for ${}^{15}O$

1.2.6 Electron Capture

Another way in which an excess proton in the nucleus can become a neutron is by a process known as electron capture. Instead of the nucleus becoming more 'negative' by emitting a positron (β^+ particle), a proton in the nucleus 'captures' an electron, usually from the innermost or K shell, but sometimes from the L shell, and becomes a neutron. When this happens an electron from an outer shell jumps into the vacant orbit, a process which results in the emission of an x-ray, the energy of which is characteristic of the new element produced.

An example is the decay of radioactive cobalt, $^{57}_{27}Co_{30}$, into the stable nuclide of iron, $^{57}_{26}Fe_{31}$. In this instance the transition is entirely by electron capture, but often both β^+ emission and electron capture occur together.

As in β^+ emission a nuclide decaying by electron capture has no change in its mass number A, but has its atomic number Z reduced by one.

1.2.7 Gamma Emission

Gamma radiation (γ radiation) consists of high energy electromagnetic radiation and is often emitted by those atoms which undergo β-particle disintegration. When, for instance, a proton is created by the emission of a β^- particle from a neutron the nucleus may find itself in an 'excited state'. This excited state represents an excess of energy which can be emitted as quanta of γ radiation. If there are several possible 'energy states' between that initially produced and the lowest possible energy level known as the 'nuclear ground state', then a characteristic line spectrum of gamma rays may be emitted.

Unlike α or β particles, gamma rays have no charge. This being so they effect no change in either the atomic number or mass number of the atom. An example of gamma ray emission is the decay of cobalt-60 to nickel-60 by the following decay process:

$$^{60}_{27}Co_{33} \longrightarrow {}^{60}_{28}Ni^{*}_{32} + \beta^-$$

$$^{60}_{28}Ni^{*}_{32} \longrightarrow {}^{60}_{28}Ni_{32gs} + \gamma_{1.17\,MeV} + \gamma_{1.33\,MeV}$$

The Ni nuclide is produced in an excited state ($^{60}_{28}Ni^{*}_{32}$) and emits two gamma rays before reaching its ground state ($^{60}_{28}Ni_{32gs}$). A simplified decay scheme for ^{60}Co is shown in *Figure 1.4*.

Sometimes the γ-ray emitted from an excited nucleus may interact directly with one of the orbital electrons with the result that the electron is ejected from the atom. X-rays, resulting from the subsequent rearrangement of electrons between orbits, are then emitted. This process is known as *internal conversion*.

Some nuclei remain in an excited state for times ranging from seconds to years. Such a nucleus is called an *isomer* of the same nuclide in its nuclear ground state which may itself be either stable or radioactive.

An example of a nuclear isomer is $^{137}Ba^{m}$. This results from the β^- decay of ^{137}Cs.

$$^{137}_{55}Cs_{82} \longrightarrow {}^{137}_{56}Ba^{m}_{81} + \beta^-$$ (The suffix 'm' denotes a metastable state)

The $^{137}Ba^{m}$ then decays to $^{137}Ba_{gs}$ with a half life† of 2.5 min with the emission of a γ-ray.

$$^{137}_{56}Ba^{m}_{81} \longrightarrow {}^{137}_{56}Ba_{81\,gs} + \gamma_{0.662\,MeV}$$

The decay scheme for ^{137}Cs is shown in *Figure 1.5*.

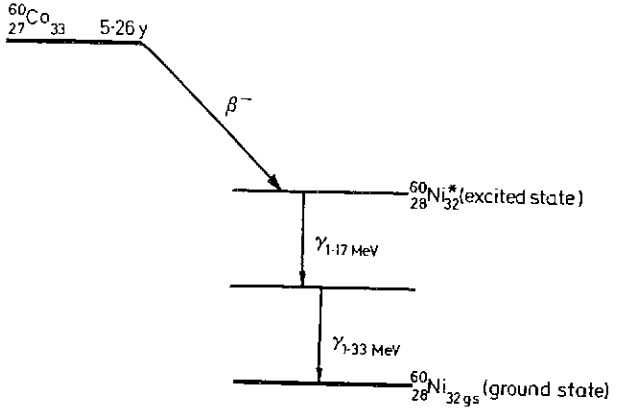

Figure 1.4 Simplified decay scheme for ^{60}Co

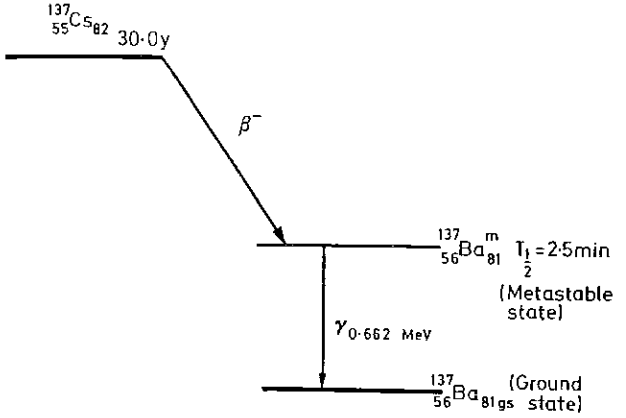

Figure 1.5 Simplified decay scheme for ^{137}Cs

Radioactive gases which are used clinically exhibit electron capture, x-ray and gamma ray emission and γ-rays derived from isomeric states, and we shall be considering these in detail.

Gamma rays are extremely penetrating. They travel easily through substances which readily absorb alpha or beta rays. To reduce

† For the definition of half-life see section 1.2.8 (page 10).

gamma radiation to an acceptable level it is often necessary to use several centimetres of lead shielding.

1.2.8 Radioactive Decay—Half-life

In the preceding sections we have considered what takes place when the nucleus changes from that of one atom to that of another. This change, accompanied by the emission of radiation, we have called disintegration or decay of the nucleus. We shall now consider the quantitative aspects of radioactive decay.

If N is the number of atoms of a radioactive substance present at time t then:

$$\frac{dN}{dt} = -\lambda N \tag{1.1}$$

where λ is a constant known as the decay constant. (The negative sign indicates that N is decreasing.) dN/dt is the rate of change of N, i.e. the number of disintegrations per unit time.

We can determine the number of nuclei which will survive at any elapsed time:

Re-arranging (1.1):

$$\frac{dN}{N} = -\lambda dt$$

Integrating:

$$\log_e N = -\lambda t + C \tag{1.2}$$

Putting t = O:

$$\log_e N_o = C \tag{1.3}$$

where N_o is the number of atoms at time t = O.

From (1.2):

$$C = \log_e N + \lambda t$$

Substituting for C in (1.3):

$$\log_e N_o = \log_e N + \lambda t$$

$$\therefore \log_e N = \log_e N_o - \lambda t$$

$$\therefore N = N_o e^{-\lambda t} \tag{1.4}$$

This is a fundamental equation. By inserting a value for t we can determine the number of nuclei N, remaining after this period of time has elapsed. A case of particular interest is when $N = \frac{1}{2}N_o$. That is to say when the number of nuclei has decayed to half its original number. Let us call the time for this to happen $T_{\frac{1}{2}}$.

Then substituting $T_{\frac{1}{2}}$ in equation (1.4) we have:

$$\tfrac{1}{2} = e^{-\lambda T_{\frac{1}{2}}}$$

$$\therefore T_{\frac{1}{2}} = \frac{\log_e 2}{\lambda} = \frac{0.693}{\lambda} \tag{1.5}$$

$$\text{or } \lambda = \frac{0.693}{T_{\frac{1}{2}}} \tag{1.6}$$

The value of $T_{\frac{1}{2}}$ is known as the half-life of the radionuclide and is a term often used to help identify a given nuclide. Half-lives range from microseconds to thousands of years; for a given nuclide however, the half-life never varies.*

The relationship between half-life $T_{\frac{1}{2}}$ and decay constant λ, is given in equation (1.6). As with λ, $T_{\frac{1}{2}}$ never changes for a given nuclide but varies enormously between nuclides.

By plotting the disintegration rate of a radioactive substance against time, we get a decay curve from which we may determine the value of $T_{\frac{1}{2}}$. *Figure 1.6* shows such a curve.

1.2.9 Units

The generally accepted unit of radioactivity is the Curie. This is defined as *the quantity of any radioactive material in which the number of disintegrations per second is* 3.7×10^{10}. Since the Curie is inconveniently large for most laboratory and clinical applications the more familiar units of millicurie (mCi) or microcurie (μCi) have been adopted. These have values of 3.7×10^7 and 3.7×10^4 disintegrations per second respectively.

1.3 RADIONUCLIDE PRODUCTION

Although the masses of atomic particles are extremely small, their values have been very accurately determined. The unit of mass used, the Atomic Mass Unit (amu) is defined as $\frac{1}{12}$ the mass of the carbon nuclide $^{12}_{6}C_6$. The mass of the neutron is 1.0086654 amu and that of the proton 1.0072766 amu. However, a deuteron (the nucleus of a deuterium atom, $^{2}_{1}H_1$), consisting of a proton and a neutron has a mass of 2.0135536 amu, an apparent loss in mass of 0.0023884 amu (*Figure 1.7*).

From the Theory of Relativity we have an equivalence of mass and energy ($E = mc^2$, where E is the energy available if a mass m is

* By changing the electron density near the nucleus very small changes in the half-life of ^{7}Be have been observed.

'converted' into energy and c is the velocity of light, 2.997925×10^{10} cm s^{-1}).

In other words, when protons and neutrons combine to form a nucleus a certain amount of energy is released which is equivalent

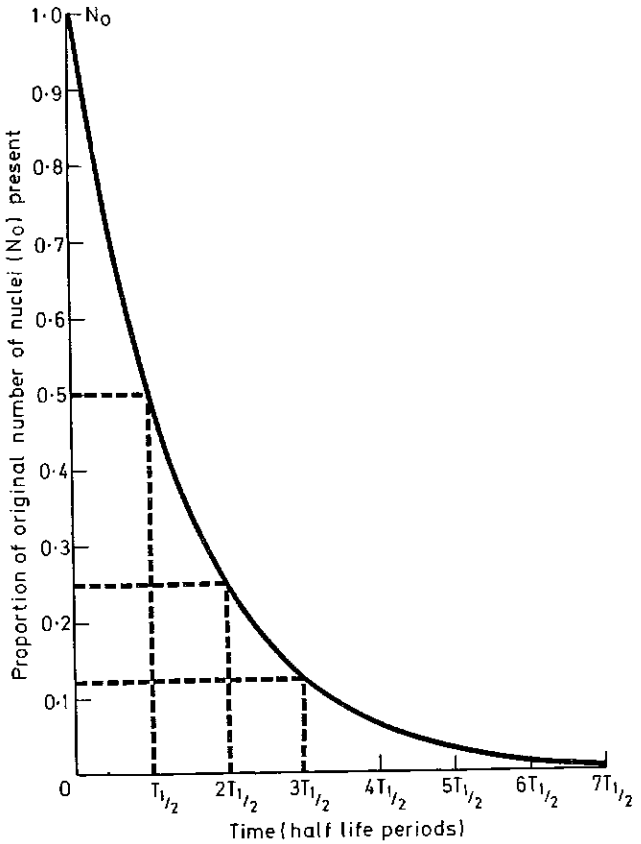

Figure 1.6 (a) Decay curve (linear plot)

to the apparent loss in mass. This energy is called the binding energy of the nucleus and its equivalent mass is known as the mass defect. Conversely, in order to split up a nucleus into its component nucleons an amount of energy at least equivalent to the binding energy has to be supplied. All nuclei undergo energy changes when they are formed and all have a mass defect.

In the cyclotron and Van de Graaff accelerator energy is given to ions by accelerating them to very high velocities; they are then

directed at the 'target' to be made radioactive. The accelerated ions (usually protons, deuterons, alpha particles or helium-3 nuclei), having an energy of several millions of electron volts (MeV), which is sufficient to overcome the repulsion of the positively charged nucleus

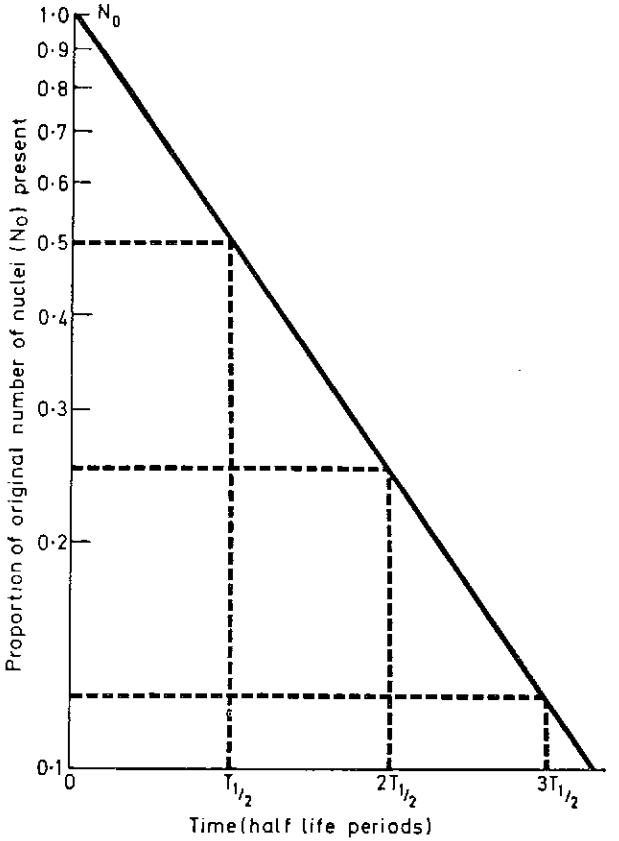

Figure 1.6 (b) Decay curve (semi-logarithmic plot)

(Coulomb Barrier), then penetrate some of the nuclei of the 'target' atoms, causing a change in their proton/neutron ratio.

The nuclear reactor works on a different principle. Uranium-235 nuclei are split up by neutron bombardment into two nuclei of approximately equal mass known as fission products. This fission process can become a chain reaction resulting in the release of large numbers of neutrons and copious amounts of energy. The fission products consist of many radionuclides and are one source of reactor

Proton mass	⊕	= 1·0072766 a.m.u.
Neutron mass	○	= 1·0086654 a.m.u.
Proton + neutron mass		= 2·0159420 a.m.u.
Deuteron mass	⊕○	= 2·0135536 a.m.u.
Proton + neutron mass - Deuteron mass		= 0·0023884 a.m.u.*

* This value is known as the MASS DEFECT or BINDING ENERGY

1 a.m.u. (atomic mass unit) = 931·5 MeV (^{12}C scale)

Figure 1.7 Calculation of the mass defect of the deuteron

produced radionuclides. The other source is the neutron bombardment of elements inserted into the neutron flux within the reactor. Again, changes in the proton/neutron ratio occur due to neutron capture.

Nuclear reactions may be written in a shorthand notation, for example:

$$^{11}B\ (p,n)^{11}C$$

i.e.	Target material nucleus	(Bombarding particle	Ejected particle)	Product nucleus

It will be seen that in the above reaction the resultant or product nucleus is that of a carbon-11 atom. Since this is deficient by one neutron for its stability it is radioactive.

1.4 FACTORS DETERMINING THE USE OF SHORT-LIVED RADIOACTIVE GASES

By detecting the radiations emitted as a radionuclide decays, its presence may be known. Detectors in common use are geiger and scintillation counters. We have seen that all the nuclides of a given element have identical chemical properties. If we 'label' a molecule or compound by using radioactive atoms in its structure, we have a *radioactive tracer* and can detect its presence in a complex physical or chemical system.

Such a technique is used in the clinical application of radionuclides. A pharmaceutical is labelled with a suitable radionuclide and administered to the patient. Its position and concentration is subsequently monitored, usually by external counters.

Nearly one hundred nuclides may exist as radioactive gases. For clinical use it is important to select a radioactive gas having suitable physiological, physical and chemical properties. This restricts the potential number to about nine, most of which have half-lives ranging from a few seconds to a few days. These we refer to as short-lived radioactive gases and are listed in Table 1.1.

In selecting a radioactive gas for a specific clinical application one usually has to compromise between many conflicting requirements. Firstly the gas must be physiologically suitable for the test concerned. Secondly its radiation characteristics and half-life must be such that the radiation dose to the patient is kept to a minimum whilst allowing accurate measurements to be made. Then there is the question of availability. It will be seen from Table 1.1 that many of the gases are cyclotron produced and some have very short half-lives. Often this restricts their use since such gases usually have to be continuously produced, the cyclotron being in the vicinity of the clinical investigation room. Although the cost and size of cyclotrons have been considerably reduced in recent years, they are still very expensive machines requiring highly skilled personnel for their operation and maintenance.

Many other factors have to be considered: how many different types of diagnostic test are to be performed and with what frequency; is a particular radioactive gas capable of being produced on a given machine; what radioactive concentration and specific activity are required and are the radioactive and chemical impurities going to be within acceptable limits; is the production of labelled gaseous compounds envisaged; does the gas have to be sterile and pyrogen free; are solutions of high radioactive concentration or double labelling techniques to be used? These and many related factors have to be carefully considered before embarking on the use of cyclotron produced radioactive gases.

The user of short-lived reactor produced radioactive gases has fewer factors to balance, since only one such gas, ^{133}Xe, is generally available. Its relatively long half-life (5.3 days) enables it to be well isolated from the point of production. This gas is available in high radioactive concentrations in a sterile condition and is widely used. Whilst useful for many measurements, it does have its limitations.

Other factors for consideration are the handling, processing, dis-

TABLE 1.1

SOME SHORT-LIVED RADIOACTIVE GASES WITH THEIR PRINCIPAL CHARACTERISTICS AND SOME CLINICAL APPLICATIONS

Nuclide	*Half-life*	*Radiation emissions and energies in MeV*	*Method of production*	*Clinical application*
$^{81}Kr^{m}$	13 s	γ 0.19	Cyclotron (Daughter of ^{81}Rb)	Pulmonary ventilation and perfusion Radiocardiography Cerebral blood flow
^{15}O (as $^{15}O_2$, $C^{15}O_2$, $C^{15}O$, and $H_2{}^{15}O$)	2.07 min	β^+ 1.74	Cyclotron	Regional pulmonary ventilation and blood flow Cardiac malfunction Cardiac output, myocardial, renal and cerebral blood flow
^{13}N (as $^{13}N_2$)	10.0 min	β^+ 1.19	Cyclotron	Regional pulmonary ventilation and blood flow
^{11}C (as ^{11}CO and $^{11}CO_2$)	20.3 min	β^+ 0.96	Cyclotron	Blood volume estimation Placental localization Spleen function studies Pulmonary investigations CO_2 pools
$^{85}Kr^{m}$	4.4 h	β^- 0.83 γ 0.15, 0.315, others	Cyclotron Reactor	Cerebral blood flow
^{135}Xe	9.2 h	β^- 0.91 γ 0.25	Reactor	Regional pulmonary ventilation and blood flow
^{79}Kr	34.5 h	E.C. β^+ 0.6 γ 0.04, 0.26, others	Cyclotron Reactor	Cerebral blood flow
^{133}Xe	5.3 d	β^- 0.35 γ 0.08 x- 0.03	Reactor	Regional pulmonary ventilation and blood flow
^{127}Xe	36.4 d	E.C. γ 0.20, others	Cyclotron	Cerebral blood flow

pensing and waste disposal of cyclotron and reactor produced radioactive gases.

All the above are discussed in the relevant chapters of this monograph and it is hoped that our experience at Hammersmith Hospital will prove of value to those wishing to use radioactive gases clinically.

1.5 SHORT-LIVED RADIOACTIVE GASES IN CLINICAL DIAGNOSIS

It should be emphasized that in general, radioactive gases are not used in primary diagnostic tests, although information is often procured which could not have been obtained in any other way. The overwhelming advantages of the diagnostic use of radioactive gases are that the patient suffers little or no discomfort, repeat or serial measurements can be quickly and safely performed, and the provisional results of the tests are often immediately available—in fact in less time than it takes to process an x-ray film. Such advantages immediately become apparent when one has to deal with children, the elderly or weak patient.

It is fortunate that elements of such physiological importance as oxygen, carbon and nitrogen have radioactive nuclides with half-lives and radiation characteristics which although not always ideal, are often satisfactory for clinical investigations. It may therefore be said with some justification that oxygen-15, carbon-11 and nitrogen-13 labelled gases are the most widely used cyclotron produced radioactive gases to date.

The fact that oxygen-15 may be produced as $^{15}O_2$, $C^{15}O$, $C^{15}O_2$ and $H_2{}^{15}O$, and that carbon-11 can be made as ^{11}CO and $^{11}CO_2$ has meant that many fundamental physiological studies have been carried out, which would otherwise have been difficult or impossible. The insolubility of $^{13}N_2$ is of equal value in such work and measurements using physiological saline solutions labelled with high specific activity $^{13}N_2$ are proving of great interest.

The short-lived radioactive gas is therefore a valuable tracer for many dynamic physiological studies, being of particular value in the investigation of pulmonary and cardiac malfunction. Regional pulmonary ventilation and perfusion are easily measured and recent studies have included investigations of pulmonary oedema. Cardiac conditions which may be diagnosed include pulmonary and mitral stenosis and circulatory shunts. The possibility of measuring cardiac output and myocardial blood flow is currently being investigated.

Other applications include total blood volume determination, placental localization, spleen function studies, radiocardiography and the investigation of cerebral and renal blood flow.

The short-lived radioactive gas is a valuable diagnostic aid. Its use in dynamic physiological studies has been well proven during the last 10 years. It is to be expected that the next decade will bring many advances in this rapidly expanding field.

BIBLIOGRAPHY

Fremlin, J. H. (1964). *Applications of Nuclear Physics.* London; English University Press.

Friedlander, G., Kennedy, J. W. and Miller, J. M. (1966). *Nuclear and Radiochemistry.* New York; Wiley.

West, J. B. (1967). *The Use of Radioactive Materials in the Study of Lung Function.* Amersham, England; U.K.A.E.A., The Radiochemical Centre.

The Production of Short-Lived Radioactive Gases

2.1 METHODS OF PRODUCTION

Short-lived radioactive gases for clinical research and diagnosis are usually produced by a cyclotron at or near the medical facility where they are to be used. The range of gases which may be made depends principally upon the types of accelerated particles available, their energy and intensity.

The modern 'compact' cyclotron having an azimuthally varying magnetic field is capable of accelerating a wide range of charged particles. In some compact cyclotrons it is possible to vary the energy of the accelerated particles. Such machines are increasingly being used for short-lived radioactive gas production at many centres of nuclear medicine.

The 'classical' cyclotron, using a uniform magnetic field, is also used at some centres and whilst not as versatile as the compact cyclotron, is nevertheless capable of producing a useful range of radioactive gases.

Van de Graaff accelerators have been used for short-lived radioactive gas production, but their widespread use is limited by the relatively low beam energies available from this type of particle accelerator.

Reactor produced radioactive gases are available for clinical use and are used by many centres not possessing a particle accelerator.

The types of charged particles in common use for short-lived radioactive gas production are protons, deuterons, helium-3 nuclei and alpha particles. Some possible reactions using these particles are listed in Table 2.1.

TABLE 2.1

TABLE OF NUCLEAR REACTIONS

Product	*Nuclear reaction*	*Abundance of target nuclide* %	*Q value* (MeV)	*Threshold Energy* E_T (MeV)
^{11}C	$^{11}B(p,n)^{11}C$	80.4	− 2.76	3.01
	$^{14}N(p,\alpha)^{11}C$	99.6	− 2.92	3.13
	$^{10}B(d,n)^{11}C$	19.6	+ 6.47	—
	$^{11}B(d,2n)^{11}C$	80.4	− 4.99	5.89
	$^{14}N(d,\alpha n)^{11}C$	99.6	− 5.14	5.88
^{13}N	$^{14}N(p,pn)^{13}N$	99.6	−10.55	11.3
	$^{16}O(p,\alpha)^{13}N$	99.8	− 5.21	5.5
	$^{12}C(d,n)^{13}N$	98.9	− 0.281	0.328
	$^{14}N(d,dn)^{13}N$	99.6	−10.55	12.06
	$^{14}N(d,t)^{13}N$	99.6	− 4.30	4.91
	$^{16}O(d,\alpha n)^{13}N$	99.8	− 7.44	8.37
^{14}O	$^{14}N(d,2n)^{14}O$	99.6	− 8.115	9.27
^{15}O	$^{14}N(d,n)^{15}O$	99.6	+ 5.07	—
	$^{15}N(p,n)^{15}O$	0.366	− 3.54	3.8
^{79}Kr	$^{79}Br(p,n)^{79}Kr$	50.5	− 2.4	2.43
	$^{79}Br(d,2n)^{79}Kr$	50.5	− 4.63	4.74
	$^{78}Kr(d,p)^{79}Kr$	0.354	+ 6.17	—
^{81}Rb	$^{79}Br(^3He,n)^{81}Rb$	50.5	+ 6.21	—
	$^{81}Br(^3He,3n)^{81}Rb$	49.5	−11.85	12.26
	$^{79}Br(\alpha,2n)^{81}Rb$	50.5	−14.39	15.12
$^{85}Kr^m$	$^{84}Kr(d,p)^{85}Kr^m$	56.9	+ 4.90	—
^{87}Kr	$^{86}Kr(d,p)^{87}Kr$	17.4	+ 3.28	—
^{127}Xe	$^{127}I(p,n)^{127}Xe$	100	− 1.33	1.34
	$^{127}I(d,2n)^{127}Xe$	100	− 3.55	3.50

2.2 CYCLOTRON TARGETS FOR SHORT-LIVED RADIOACTIVE GAS PRODUCTION

Targets for radioactive gas production are generally positioned outside the cyclotron dee box vacuum chamber and are known as 'external targets'. For the production of some radionuclides, targets may be situated inside the dee box. These are of quite different design from external targets and are known as 'internal targets'. Since all the targets which we shall be considering are of the external type, we shall refer to them simply as 'targets' or 'target boxes'.

The purpose of the cyclotron target is to support the target material during bombardment and contain the radioactive gas produced. If the product is very short-lived it is continuously swept out of the target during bombardment with a gas known as the *sweep gas*. *Figure 2.1* shows an exploded view of a target of the continuously swept type used for the production of nitrogen-13

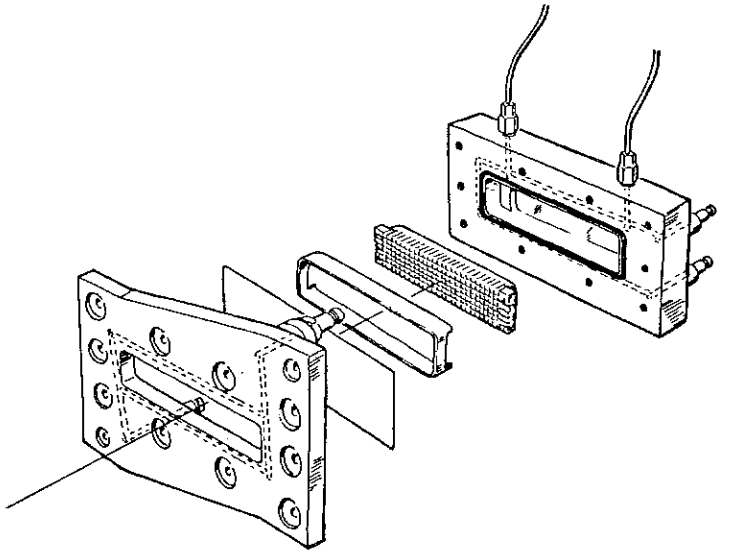

Figure 2.1 Target for continuous radioactive gas production (nitrogen-13)

labelled molecular nitrogen, $^{13}N_2$ ($T_{\frac{1}{2}} = 10$ min). Longer-lived products may be produced batch-wise, being retained in the target box until the end of bombardment. *Figure 2.2* shows a target box used in this way, the radioactive gas in this case being krypton-85m labelled krypton ($T_{\frac{1}{2}} = 4.4$ h).

Many targets for radioactive gas production are constructed on the lines of the ones just discussed. Sometimes, however, the target material is a salt, the crystals being melted or pressed firmly into grooves cut in an aluminium or copper plate (*Figure 8.2*). The target material may be a gas in which case the target is simply a hollow box pressurized with the target gas, or continuously flushed with a sweep gas which may itself be the target gas.

In general, five principal factors have to be taken into account when designing targets for short-lived radioactive gas production:

(*a*) The physical properties and chemical purity of the target material which may be a solid or a gas.

(*b*) The selection of a beam energy that will maximize the yield of the required radionuclide and minimize the yield of possible impurities.

(*c*) The method to be used to recover the radioactive gas from the target during or after bombardment.

(*d*) The selection of suitable materials for the component parts of the target box.

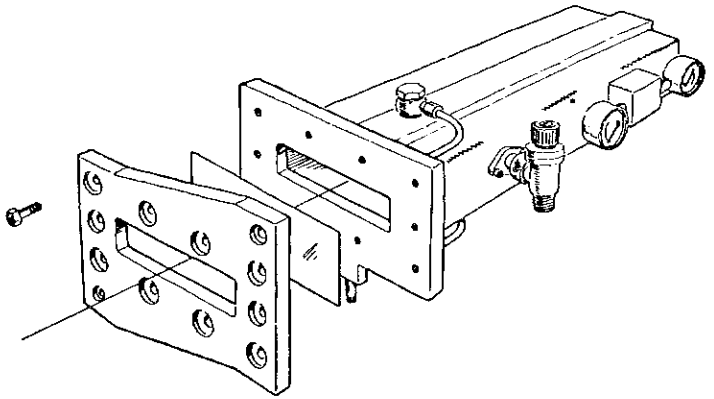

Figure 2.2 Target for batch-wise radioactive gas production (krypton-85 m)

(*e*) The provision of cooling adequate to ensure minimum temperature rise of the beam entry foil window consistent with optimum temperature rise of the target material.

2.2.1 Target Materials

Target materials used for short-lived radioactive gas production are invariably gases or solids, although during bombardment solids sometimes become molten or eroded. The choice of element for the target material is largely governed by the energies and types of accelerated particles available, the required radionuclide, and the nuclear reactions most likely to occur (Table 2.1). Other factors include the available beam current, the isotopic abundance and nuclear cross-section of the target element, the specific activity and radioactive concentration of the required radionuclide, possible contamination by undesired nuclear reactions and the ability to support the target material in the ion beam for sufficiently long periods.

Gases as Target Materials

Gases are used as the target material for the production of some radionuclides, for example, ^{15}O, ^{13}N, ^{11}C and $^{85}Kr^{m}$. There is rarely any difficulty in containing the gas in the beam, the target being basically a gas-tight hollow box with a beam entry foil window at one end (*Figures 2.2, 5.3* and *7.2*). When the product radionuclide is short-lived, e.g. ^{15}O ($T_{\frac{1}{2}} = 2.07$ min), it is made continuously, the sweep gas being the target gas. Longer-lived radioactive gases such as $^{85}Kr^{m}$ ($T_{\frac{1}{2}} = 4.4$ h) are made in a pressurized target box and extracted after bombardment. Continuous flow targets are operated at about 0.7 kg cm^{-2} (10 lb in^{-2}) gauge. Pressurized targets have been operated successfully at pressures up to 10.5 kg cm^{-2} (150 lb in^{-2}) gauge during bombardment[4,9], the limiting factor invariably being the mechanical strength of the target window.

Since the beam is less easily absorbed in a gas than a solid, targets using a gas as the target material are longer in the direction of the beam path than other targets, typically 10 cm to 100 cm. For optimum target yield it is necessary for the beam to be degraded within the target material to the practical threshold energy of the desired nuclear reaction (see section 2.2.2, page 27). *Figure 2.3* shows the ranges of protons and deuterons in some gases. Some improvement in beam absorption is effected by increasing the gas pressure where this is possible.

Gases used in targets should be prepared from high purity (99.9 per cent) stock, except where the presence of trace impurities has been shown to be immaterial. The presence of certain trace impurities has sometimes been thought to be beneficial in some methods of production. Often, however, the level of the impurity is variable and not always easily determined, leading to variable yields and on occasions, misleading results.

Enriched target gases are rarely used due to their high cost. Fortunately krypton is the only target gas currently used having a large number of stable nuclides and it is inevitable that undesired nuclear reactions occur. In such cases one can often obtain acceptable results by the careful control of bombardment conditions (section 2.2.2, page 27) and by allowing any short-lived contaminants to decay before the product is used (see section 8.3.2, page 273).

When a gas is used as the target material its life is limited only by the rate at which it is permanently lost from the target, either deliberately as a sweep/target gas, by accidental leakage in the case of pressurized targets, or by radiolysis. In some systems the sweep/target gas is continuously recirculated through the target in order to increase the radioactive concentration. Such systems are known as

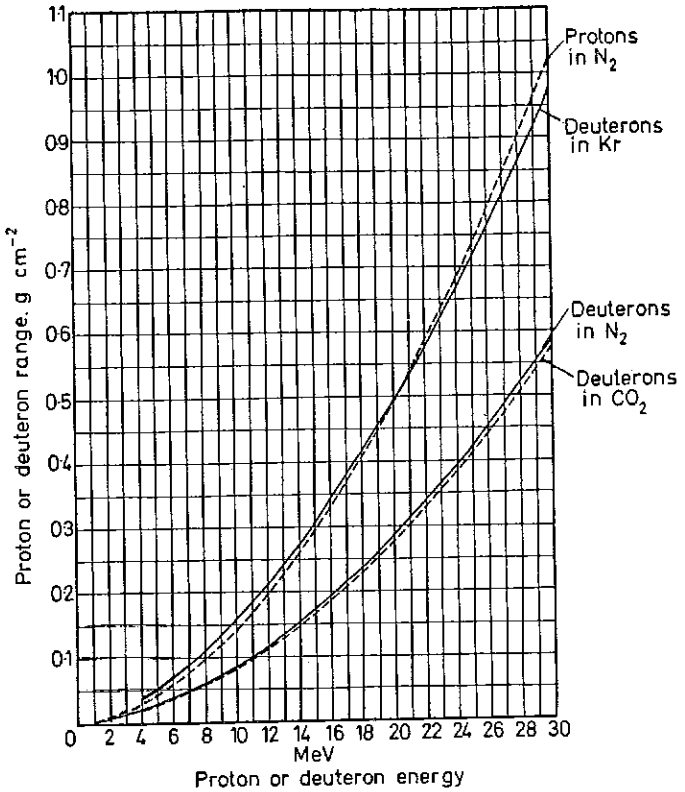

Figure 2.3 Range *versus* energy relationship for protons and deuterons in some gaseous target materials. Derived from data contained in references (1), (2) and (10)

The approximate range of deuterons in various materials may be obtained from the range of protons in the same materials using the following expression:[1]

Range of deuterons of energy 2E = twice the range of protons of energy E.

Conversely:
Range of protons of energy E = half the range of deuterons of energy 2E.

These expressions are valid for deuterons having an energy in excess of approximately 2 MeV[1]. (See also reference (5), page 99.)

Example of the use of range/energy curves
Determine the energy lost by a 26 MeV proton beam as it passes through 45 cm of N_2 at a pressure of 8 atmospheres and a temperature of 15 °C.

Density of N_2 at 1 atmosphere and 15 °C $= 0.00132$ g cm^{-3}

$\therefore$ Density of N_2 at 8 atmospheres and 15 °C $= 8 \times 0.00132$ g cm^{-3}
$= 0.0106$ g cm^{-3}

$\therefore$ 45 cm N_2 at 15 °C and 0.0106 g cm^{-3} $\equiv 45$ cm $\times$ 0.0106 g cm^{-3}
$\equiv 0.477$ g cm^{-2}

From *Figure 2.3*:
Range of 26 MeV protons in N_2 $= 0.79$ g cm^{-2}
$\therefore$ Residual range after passing through 0.477 g cm^{-2} N_2 $= 0.79$ g cm$^{-2} - 0.477$ g cm^{-2}
$= 0.313$ g cm^{-2}

$\therefore$ Emergent energy (corresponding to 0.313 g cm^{-2}) = 15.5 MeV

$\therefore$ Energy lost $= 26 - 15.5$ MeV
$= 10.5$ MeV

Note. In practice the beam power deposited in the nitrogen would cause it to reach a temperature in excess of 15 °C with resulting pressure and density changes. Thus when designing gas targets, allowance should be made for this.

'closed circuit systems'. Conversely, those in which the sweep/target gas is not recirculated, but continuously removed, are known as 'open circuit systems'.

In some target systems the radionuclide is produced largely in the required chemical form within the target, often simplifying the subsequent chemical processing. When this is not the case, more extensive chemical processing is necessary.

Solids as Target Materials

Solid target materials are sometimes used, as in the production of ^{11}C, ^{13}N, ^{81}Rb ($^{81}Kr^{m}$), ^{79}Kr and ^{127}Xe. The method of supporting the material is determined principally by its physical properties at the temperature reached during bombardment. Carbon, for the production of ^{13}N is simply held with a spacer in a recess in the target body (*Figure 2.1*); other elements such as bromine or iodine for ^{81}Rb, ^{79}Kr and ^{127}Xe production, are used as the chemical compounds NaBr, LiBr and NaI. These materials may be either pressed into grooves cut in an aluminium backing plate, or melted onto a grooved copper plate (*Figures 2.5 and 8.2*).

Usually the target material is held normal to the beam, the product radionuclei being either immediately removed from the target by a sweep gas or retained in the target material for extraction after bombardment. Boron, used as a target material in the form of B_2O_3 for ^{11}C production is, in one target system, not held normal to the beam, but melted onto a stepped aluminium or brass wedge which is deliberately in poor thermal contact with the surrounding box (*Figure 7.6*). During bombardment the beam strikes the B_2O_3 at grazing incidence with sufficient power to melt it, releasing ^{11}C labelled gases into a sweep gas continuously passed through the target box.

Since solids are generally about 10^4 times more dense than gases, the beam is more readily absorbed in solid target materials resulting in higher 'nuclear' efficiencies (*Figure 2.6*). For optimum target yield it is necessary for the beam to be degraded within the target material to the practical threshold energy of the desired nuclear reaction. *Figure 2.4* shows the ranges of protons and deuterons in some solids. Typical target material thicknesses are the order of 0.1 cm to 1 cm. However, although the 'nuclear' efficiency is usually higher in targets using a solid target material than in those using a gas, the extraction efficiency is usually lower since it is often difficult to remove all the product nuclei from the crystal lattice.

A high degree of chemical purity of solid target materials is desirable in some cases. As we have seen, solid target materials are

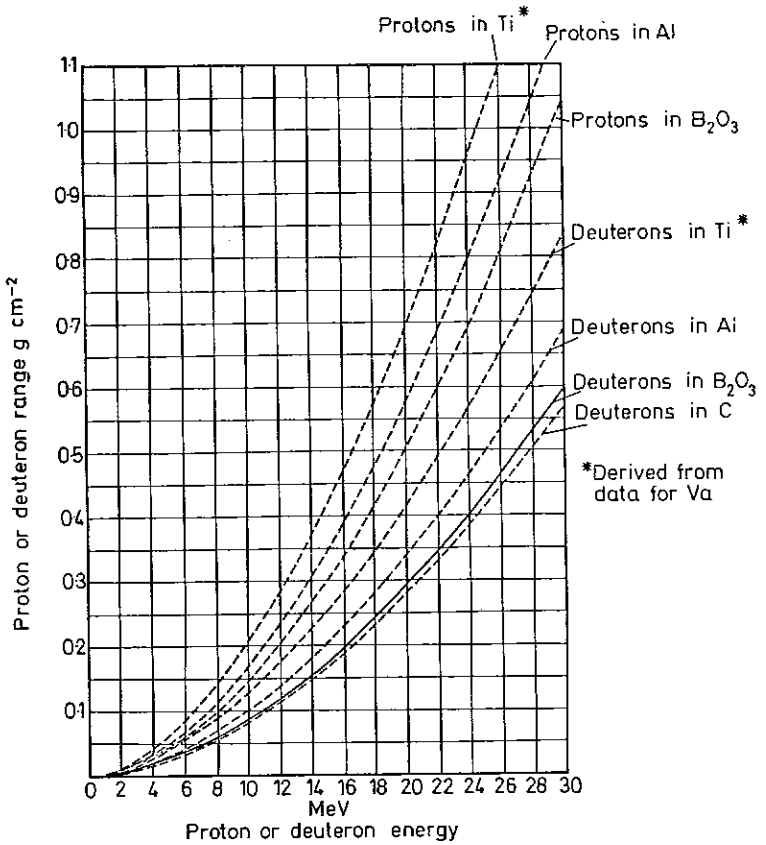

Figure 2.4 Range *versus* energy relationship for protons and deuterons in some solid target materials and some metals used for beam entry windows. Derived from data contained in references (6) and (10).

The approximate range of deuterons in various materials may be obtained from the range of protons in the same materials using the following expression:[1]

Range of deuterons of energy 2E = twice the range of protons of energy E.

Conversely:
Range of protons of energy E = half the range of deuterons of energy 2E.

These expressions are valid for deuterons having an energy in excess of approximately 2 MeV[1]. (See also reference (5), page 99.)

Example of the use of range/energy curves
Determine the energy lost by a 22 MeV proton beam as it passes through a 1.5 mm aluminium window.

Density of aluminium $= 2.7 \text{ g cm}^{-3}$

$\therefore$ 1.5 mm aluminium $\equiv 0.15 \text{ cm} \times 2.7 \text{ g cm}^{-3}$
$= 0.405 \text{ g cm}^{-2}$

From *Figure 2.4*:
Range of 22 MeV protons in aluminium $= 0.68 \text{ g cm}^{-2}$
Residual range after passing through 0.405 g cm^{-2} Al window $= 0.68 \text{ g cm}^{-2} - 0.405 \text{ g cm}^{-2}$
$= 0.275 \text{ g cm}^{-2}$

$\therefore$ Emergent energy (corresponding to 0.275 g cm^{-2}) = 13.2 MeV

$\therefore$ Energy lost = 22 − 13.2 MeV
= 8.8 MeV

often in the form of compounds and the nuclear reactions resulting from the bombardment of all the elements in such compounds have to be considered. The isotopic abundance of the particular target nuclide may also be of importance.* However, bombardment conditions can often be selected to give rise to the required product radionuclide in reasonable concentrations, contaminating radionuclides being removed during processing.

The life of the target material is largely determined by either its migration from the beam strike area during bombardment, or its chemical reaction with, and removal by, the sweep gas. Useful life times for solid target materials range from one to 12 hours.

2.2.2 The Selection of Beam Energy

Practical Threshold Energy

In the course of radionuclide production it is often useful to refer to a term 'practical threshold energy'[7]. This is a rather qualitative term which refers to the energy of the incident nuclear particle that will cause a given nuclear reaction to proceed in *good yield*, or in the case of a reaction causing an impurity, the particle energy at which the reaction may *effectively be suppressed*.

In reactions where the Q value[5] is negative, the practical threshold energy will generally be somewhat higher than the threshold energy E_T, the term usually referred to in nuclear physics[5]. In reactions where the Q value is positive, the practical threshold energy may be quite low.

Thus, for example, an interfering reaction with a negative Q value may readily be suppressed in the presence of a desired reaction that has a positive Q value. In a practical case (see section 5.2, page 126) the energy is reduced and the absence of interfering products demonstrated.

2.2.3 The Recovery of Radioactive Gas from the Target

The method of recovering a radioactive gas from the target in which it is made depends upon the type of target and whether the gas is to be removed during or after bombardment.

Removal during Bombardment (Continuous Flow Target)

To remove radioactive gases during bombardment, a sweep gas is passed through the target at a suitable flow rate. Targets of this type are known as continuous flow targets and include those for the production of ^{15}O, ^{13}N and ^{11}C (*Figures 5.3, 6.2, 6.4, 6.10, 7.2 and*

* For example when only low deuteron energies are available it is advantageous to use enriched $^{10}B_2O_3$ for ^{11}C production.

7.5). The flow rate used for a given target depends mainly on the half-life of the product nuclei and the required radioactive concentration of the effluent gas, but is usually between 25 ml min^{-1} and 500 ml min^{-1}. In general, high sweep gas flow rates are used for very short-lived radionuclides such as ^{15}O; lower flow rates are used for the longer-lived radionuclides, ^{13}N and ^{11}C.

The factors which can determine the total yield recovered from a continuous flow target include the following: the sweep gas composition, its pressure and flow rate; the total swept volume; the position of the input and output ports relative to each other and to the beam strike area; the target material temperature (solid target materials).

The product radionuclei are produced as highly excited free radicals ('hot atoms') which will readily react with the constituents of the sweep gas. The addition of a small percentage of stable carrier to the sweep gas will sometimes enhance the recovered yield, although it will reduce its specific activity.

The radioactive concentration of the gas swept from the target may be controlled to some extent by varying the target input flow rate and hence the flow rate of the effluent gas. Maximum radioactive concentration is attained when as many of the product radionuclei as possible are removed with the minimum sweep gas flow rate. The volume of continuous flow targets is usually made as low as possible in order to maximize the radioactive concentration of the product. However, targets using the sweep gas as the target material should have sufficient depth for the contained gas to fully utilize the beam; this tends to set a limit to the minimum volume of this type of target (section 2.2.1, page 23). The maximum volume is limited by the gas residence time in the target compared with the half-life of the product nuclei, and the required radioactive concentration of the effluent gas (see sections 5.4.6, page 164 and 6.2.1, page 176).

The gas input and output ports in all continuous flow targets should be positioned to avoid 'streaming' of the sweep gas between them and thus leaving some of the product nuclei in the target box. Ideally they should be placed as far apart as possible, preferably in opposite diagonal corners of the box if the target is of the type where the sweep gas is the target material. In targets using a solid target material, the sweep gas may be made to flow directly across the beam strike area, the input and output connections being on the sides of the target.

The temperature of solid target materials during bombardment is of particular importance since, for the product to be released from the crystal lattice, the target material often has to be either molten

or eroded in the beam strike area. Careful target design can usually result in the beam power effecting an adequate temperature rise.

Removal after Bombardment

Different methods are used to recover the radioactive gas from the target after bombardment. The principal factors which determine a particular method are the nature of the target material (solid or gas) and the required radioactive concentration and specific activity.

In general, the mobility of the product radionuclei is largely determined by the nature of the target material in which they are formed. Thus if the target material is a gas, for example krypton for $^{85}Kr^{m}$ production, the radionuclei will be dispersed within the gas; if a solid, which has remained a solid during bombardment, for instance sodium iodide for ^{127}Xe production, they will be trapped within its crystal lattice.

Product nuclei dispersed within a gas can sometimes be removed from the target by sorption pumping, suitable media being molecular sieve or activated charcoal, at either $-72°C$ (industrial methylated spirit (IMS) and solid CO_2 mixture) or $-196°C$ (liquid nitrogen). Molecular sieve is preferable where possible since its characteristics are more reproducible than those of activated charcoal.

An alternative method of extracting the target activity is simply to flush the target gas into a suitable container with another gas. The choice of the flushing gas will be determined by the required radioactive concentration, specific activity and the clinical application. Helium, nitrogen, carbon dioxide or a gas of the same chemical species as the product are some possible choices. Whichever flushing gas is used the radioactive concentration of the extracted product will be reduced; if the gas is of the same chemical species as the product, the specific activity will also be reduced. Generally, sorption pumping results in a high extraction efficiency and maximum radioactive concentration; flushing, in a lower extraction efficiency and less than the maximum possible radioactive concentration.

To extract the product nuclei from the crystal lattice of a solid target, the target material (usually a salt) is put into a gas-tight container to be subsequently dissolved in a few millilitres of water. The released gas is transferred to a collection vessel using a suitable flushing gas. As before, the radioactive concentration and specific activity depend upon the type and volume of the flushing gas used. Gases which have been used include air and carbon dioxide; when the latter is used the radioactive concentration may be increased by absorption of the CO_2 in sodium hydroxide solution.

2.2.4 Materials Used in the Manufacture of Cyclotron Targets

Two main factors determine the choice of target box materials. One is the possible production of long-lived radionuclei within the materials due to ion and neutron bombardment; the other is the ability of the materials to withstand the temperatures and pressures reached during bombardment. The effects of chemical attack by the products of radiolysis or by the desired product species must also be considered. Aluminium is usually to be preferred since all likely nuclear reactions with it result in radionuclides with short half-lives. However, unless it is of high purity, aluminium often contains traces of magnesium which can result in the production of sodium-22 ($T_{\frac{1}{2}} = 2.6$ years).

The high thermal conductivity of aluminium is an advantage since it is usually necessary to remove several hundred watts of heat from the target during bombardment. Aluminium targets which have to be fabricated rather than machined from the solid may be argon arc welded. A disadvantage in some applications of aluminium is its lack of strength. Care should be taken in the design of aluminium targets which have to be pressurized. During bombardment the pressure may rise to more than twice its original value which could result in distortion or even fracture. An example is the target for $^{85}Kr^{m}$ production. The use of strengthening members which also form the water cooling channels is shown in *Figure 2.2*.

The most vulnerable component of nearly all radioactive gas targets is the beam entry foil window. This is usually made as thin as possible to minimize the amount of energy deposited in it. An exception is the use of thick windows which act as beam energy degrading filters. Window materials which have proved successful include 0.025 mm stainless steel foil (type EN58B), 0.006–0.025 mm Havar* (another stainless steel), 0.025 mm titanium, 0.050 mm aluminium and 1 mm magnesium. Stainless steels contain many elements which can produce long-lived radioactive contaminants such as ^{56}Co ($T_{\frac{1}{2}} = 77.3$ d), ^{57}Co ($T_{\frac{1}{2}} = 270$ d), ^{58}Co ($T_{\frac{1}{2}} = 71$ d), ^{61}Cu ($T_{\frac{1}{2}} = 3.3$ h) and ^{62}Zn ($T_{\frac{1}{2}} = 9.3$ h) under high energy ion bombardment; such foils become very active after prolonged use. Aluminium is to be preferred whenever possible. Magnesium produces sodium-22 ($T_{\frac{1}{2}} = 2.6$ years) under deuteron bombardment by the $^{24}Mg(d,\alpha)^{22}Na$ reaction and can be a useful by-product for use as a long-lived β^+ standard[3].

Another material used in the manufacture of target boxes is brass. Although stronger and more easily worked than aluminium it has the disadvantage of producing a variety of contaminants in use, the

* Hamilton Precision Metals, Lancaster, Pennsylvania, U.S.A.

longest-lived being ^{65}Zn with its 245 d half-life. Useful materials for applications where corrosion is anticipated are stainless steel[8], titanium, nickel[11], silica[8] and glass[4,9].

Graphite is used in some targets as a target material retaining medium. This material may also be used for beam defining apertures.

Targets are usually made gas tight with 'O' ring seals. Provided the temperature does not exceed 110 °C, Neoprene is quite satisfactory. For higher temperatures up to 170 °C 'Viton' 'O' rings should be used. Plastics such as silicone rubber (250 °C) and polytetrafluoroethylene (PTFE) (200 °C) are sometimes used in seals and connections. Provided these materials are not intercepted by the beam and are used within their temperature limits they are quite satisfactory, long-term radiation damage or the effects of radiolytically produced corrosive materials being the most likely causes of premature failure.

Table 2.2 lists some properties of typical materials used in the manufacture of cyclotron targets.

2.2.5 Target Cooling

Since practically all of the charged particle beam power is dissipated as heat, efficient cooling of the target is necessary to ensure the optimum temperature rise of all its component parts. The total amount of power involved may be 1500 W or more, the actual value depending upon the beam current and energy.

The beam power density is of particular importance; if it is high the beam current which can safely be applied to a given target may be severely limited. The cross-sectional area of the beam at the cyclotron dee box exit port can be as low as 1 cm^2, resulting in peak beam power densities in excess of 2000 W cm^{-2} in some cases.

Target cooling can therefore present some formidable problems. The most effective solution is a combination of beam spreading and the rapid removal of heat from the most vulnerable parts of the target. In the Medical Research Council cyclotron the emergent particle beam is defocussed by quadrupole magnets to cover a relatively large area (5–10 cm wide and ~1 cm high).

Generally speaking, the target box, 'O' ring seals and beam entry foil window need to be kept as cool as possible, the temperature reached by the target material being allowed to vary widely depending upon the particular element or compound under bombardment. For example, to avoid surface melting and loss of product nuclei, the temperature of sodium iodide (^{127}Xe) must be kept as low as possible, whilst that of carbon (^{13}N) has to reach over 1400 °C for the target to work efficiently. *Figure 2.5* shows how the beam power is deposited according to the type of target used.

TABLE 2.2

MATERIALS FOR TARGET MANUFACTURE

Material	*Typical induced radionuclides with* $T_{\frac{1}{2}} > 2h$		*Fabrication techniques*	*Typical maximum operating temp.* °C	*Typical application*
	Particle	*Product*			
Aluminium	d α	^{24}Na Negligible	Inert gas welding	200	Target boxes Window/beam filters. Backplates
Brass	d α	^{65}Zn, ^{66}Ga, ^{67}Ga ^{66}Ga, ^{67}Ga	Brazing	200	Target boxes Stepped wedges Gas fittings
Magnesium	d α	^{24}Na, ^{22}Na Negligible	Machining	200	Window/beam filters
Copper	d α	^{65}Zn ^{66}Ga, ^{67}Ga	Brazing and inert gas welding	250	Backplates Gas tubes
Glass	d α	^{24}Na Negligible	Glass-working	400	Target liners
Titanium	d α	^{48}Va ^{51}Cr	Inert gas welding	700	Windows Target boxes
Nickel	d α	^{64}Cu ^{62}Zn	Inert gas welding	800	Windows Corrosion resistant targets and fittings
Silica	d α	Negligible Negligible	Glass-working	800	Target liners
Stainless steel	d α	^{56}Co, ^{61}Cu ^{62}Zn	Brazing and inert gas welding	800	Windows
Graphite	d α	Negligible Negligible	Machining	1200	Target material Target material retainers. Beam defining apertures
Neoprene	—	—	—	110	'O' rings
Tufnol	—	—	Machining Epoxy resin	150	Electrical insulators
Viton	—	—	—	170	'O' rings
PTFE	—	—	Machining Hot swaging	200	Gaskets. Electrical insulators. Corrosion resistant gas fittings
Silicone rubber	—	—	—	250	Gaskets 'O' rings

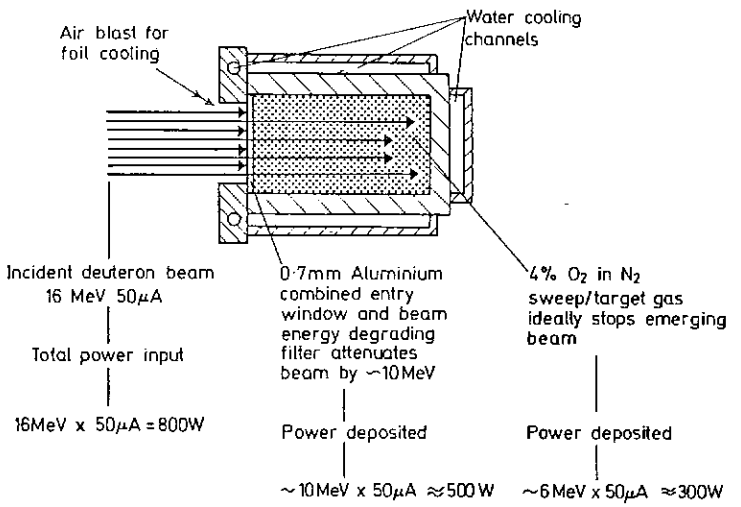

2·5 a

Figure 2.5 (a–c) Schematic representation of beam power deposition in various types of target: (*a*) oxygen-15 target; (*b*) nitrogen-13 target; (*c*) xenon-127 target.

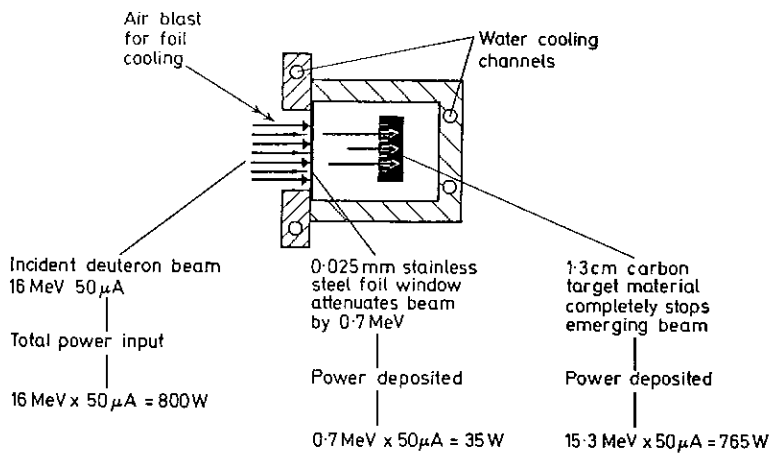

2·5 b

Cooling is achieved in two ways; deionized water is circulated at about 9 l min^{-1} through the target body or front plate or both, and a recirculating air or inert gas flow ($\sim$ 140 l min^{-1}) is used for the beam exit and target entry foil windows. If air is used it will become highly radioactive since it will have been recirculated through the beam throughout the bombarding period. Although most of the

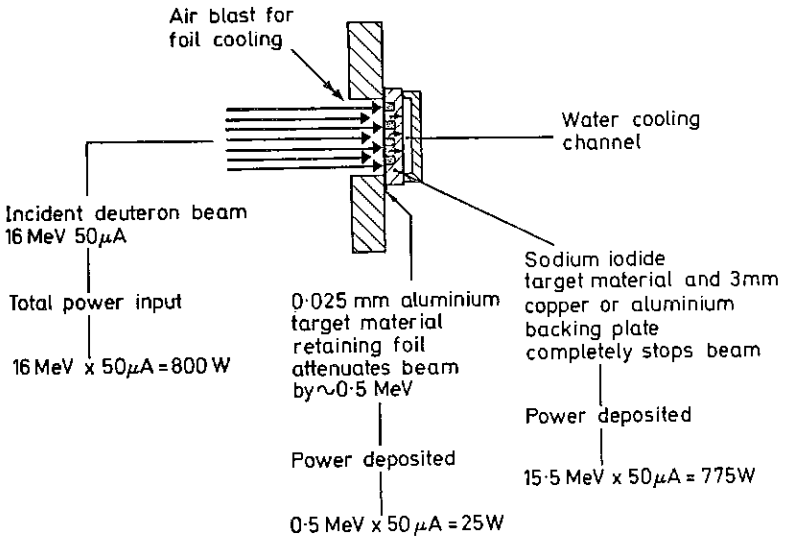

2·5 c

activity will be short-lived, long-lived components such as argon-41 ($T_{\frac{1}{2}}$ = 1.83 h) may be present. Special care is therefore necessary in the disposal of waste cooling air (see section 3.9, page 86).

Where possible an inert gas such as helium is preferred. The advantages are that it has a high thermal conductivity, corrosion is eliminated and no undesirable activity is induced in this gas. However, to avoid a loss of helium the recirculating gas system must be leak free.

In practice the foil window is cooled not only by the recirculating gas but also by conduction to the mounting plate and target body between which it is clamped (*Figure 2.1*). Thus the shape of the beam entry window will have a significant effect upon the amount of heat removed from the foil by conduction. Clearly for maximum heat removal the beam entry window must have the maximum perimeter for the minimum area, i.e. it must be a rectangle. Conversely, the

minimum amount of heat is removed by conduction from a circular beam entry foil window.

In targets for radioactive gas production the foil window is usually the first component to fail, often due to the combined effects of heat and pressure. Usually problems do not arise if the beam power density can be kept below about 100 W cm^{-2}. In targets where a high peak beam power density is required (e.g. ^{13}N graphite matrix target) (see section 6.2.2, page 179), special attention must be paid to the foil window material and to the effectiveness of the recirculating gas cooling system.

2.3 TARGET EFFICIENCY MEASUREMENTS

It is often desirable to be able to determine the efficiency of a given target system used for radioactive gas production. This is particularly necessary when the comparative performance is required of different systems used for the production of a specific radionuclide. The term 'target efficiency' requires some definition. As we shall see, there are various parameters which may be related to give a measure of the target efficiency. It should be noted that all efficiency determinations are made using steady state output levels, that is to say the maximum output of which a target system is capable under the conditions being investigated.

The parameters to be considered in the determination of target efficiency for the production of a given radionuclide are:

(*a*) The number of product nuclei actually produced in the target material per unit time. This value is determined principally by the incident charged particle flux, the charged particle energy, the total nuclear cross section and the thickness of the target material.

(*b*) The number of product nuclei released from the target material per unit time. The properties of the target material whether solid or gas largely determine this value. In the case of solids, the physical release of volatile products from the lattice at elevated temperatures, and chemical/radiation chemical reactions are controlling factors. However, in the case of gaseous target materials the predominating factors are chemical and radiation chemical.

(*c*) The number of product nuclei recovered from the target per unit time. The factors determining this value include the flushing or sweep gas composition and flow rate, the reactivity with the target box and gas connection tube materials of any labelled compounds formed, and the temperature and volume of the whole target system.

Now (*a*) reflects the 'nuclear' efficiency, (*b*) affects the release

efficiency and (*c*) controls the extraction efficiency (see *Figure 2.6*). However the authors have found that in practice the most useful expression is c/a × 100%, i.e.

$$\frac{\text{The number of product nuclei recovered from the target per second}}{\text{The number of product nuclei actually produced in the target material per second}} \times 100\%$$

which we shall call the *combined efficiency* and uses parameters which are relatively easy to determine by direct measurement.

To determine the combined efficiency for a given target system it is necessary to perform two bombardments under known irradiation conditions. The first is a *dynamic* bombardment to establish the rate

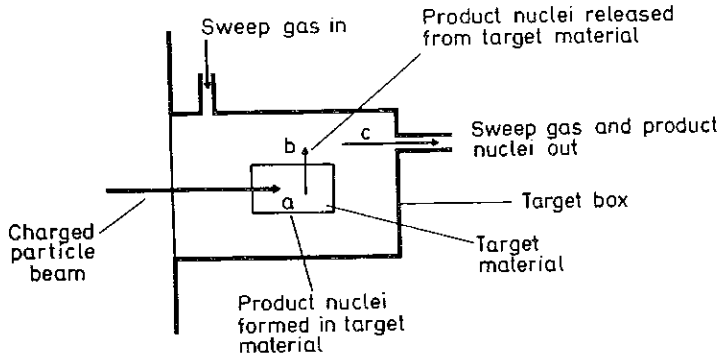

Figure 2.6 Schematic representation of various target efficiency factors: *a* = 'nuclear' efficiency; *b* = release efficiency; *c* = extraction efficiency

of recovery of the desired product nuclei under given practical irradiation and flow rate conditions; the second is a *static* bombardment to determine the induced activity in the target material itself, under conditions where there is no loss of product nuclei from the target.

It should be noted that whilst the dynamic bombardment may be made at a normal beam current, the static bombardment should be carried out using as low a beam current as practicable (typically 1–5 μA). This low beam current is especially necessary when irradiating solid target materials of low melting point, to avoid the loss of product nuclei into the gas space in the target.

2.3.1 Efficiency Measurements on Continuous Flow Targets which Use a Gaseous Target Material

In general, the value of the combined efficiency is higher in targets having a gas as the target material than in those in which a solid is

used, since in the dynamic bombardment the product nuclei, if in a volatile chemical form, are free to be swept out of the target. The dynamic bombardment is carried out using normal irradiation and flow conditions, preferably using a spiral and high pressure re-entrant ionization chamber for the activity measurement (see section 3.7, page 73). Care should be taken to ensure that the spiral is not made of a material which will trap any of the output activity at room temperature. The target is irradiated until the monitored output activity has reached an equilibrium level, the value of which is then noted together with the beam current and flow rate.

The static bombardment is made at a low beam current with the target sealed. The irradiation time can be shorter than that required to produce saturation activity, provided that the beam current and irradiation time are accurately known. As soon as possible after the end of bombardment the target is removed and the activity induced in the target gas is measured. For this type of target this can be difficult. It is not sufficient just to flush the gas out, since some of the product nuclei may have formed labelled compounds which may stick to the interior surfaces of the target box. This being the case, a simple method of making the static measurement is to determine the activity of the intact target and subtract the contribution due to the activity induced in the target box itself, using decay curve analysis. It is useful to carry out a 'simulated' irradiation with the target gas replaced with a suitable pressure of helium. However, quite a large ionization chamber is needed to measure a large target.

An alternative arrangement is to use a target containing an easily removable aluminium foil lining. The gas is extracted either by flushing or preferably by sorption pumping and the lining removed, the activity in the gas and on the lining then being measured. The target gas and lining are likely to contain activities other than the one of interest. Therefore samples of the gas and lining should be obtained and studied using a Ge/Li gamma ray spectrometer. All radionuclides present in the system should then be readily identifiable, their half-lives being subsequently used in any decay curve analyses.

Having established the activity in the target gas it is possible to calculate the rate of production at the same beam current as that used for the dynamic bombardment. Hence the combined efficiency can be obtained (see Appendix 1).

2.3.2 Efficiency Measurements on Continuous Flow Targets which Use a Solid Target Material

Efficiency measurements are easier to carry out on targets using a solid target material than on those using a gas. The reason for this

is that it is a relatively simple matter to remove the target material for the static measurement with little or no significant loss of product nuclei. Even so, care should be taken to collect any activity in the gas space of the target box before removal of the target material. This is especially necessary when the latter is likely to produce volatile products during the irradiation, as for example in the case of boron trioxide. Target materials such as carbon do not readily release product nuclei and this problem does not then arise.

The dynamic bombardment is carried out using normal irradiation and flow conditions, preferably using a spiral and high pressure re-entrant ionization chamber for the activity measurement (see section 3.7, page 73). Care should be taken to ensure that the spiral is not made of a material which will trap any of the output activity at room temperature. The target is irradiated until the monitored output activity has reached an equilibrium level. This value is then noted together with the beam current and gas flow rate.

The static bombardment is made at a low beam current with the target sealed. The irradiation time can be shorter than that required to produce saturation activity, provided the beam current and irradiation time are accurately known. As soon as possible after bombardment the target is removed, and if of a type where there are likely to be any volatile labelled products, is flushed with a suitable gas to collect these in a container. The target material is then removed and its activity measured in a calibrated ionization chamber together with the volatile labelled products. Products other than the one of interest are likely to be present. Therefore samples of the target material and volatile products should be subjected to qualitative gamma ray spectrometry as described in the previous section.

Knowing the beam current, bombardment time and time of ionization chamber measurement, it is possible to calculate what the rate of production would have been in the target material at the same beam current as that used for the dynamic bombardment. Hence the combined efficiency can be obtained (see Appendix 1).

Sometimes the target material is supported by a substance which produces nuclei of a relatively long half-life compared with those formed in the target material. Such is the case when B_2O_3 is melted onto an aluminium wedge for deuteron irradiation; ^{24}Na ($T_{\frac{1}{2}} = 15.4$ h) may be formed in the wedge and this will add to the ionization chamber reading. Decay curve analysis may be used to determine the ^{24}Na contribution.

As we have seen, the combined efficiency refers to the ratio of the rate of recovery from the target and the rate of production in the

target material. Now unless the target material is sufficiently 'thick' to reduce the energy of the charged particle beam to the practical threshold energy for the reaction being considered, the figure obtained for the combined efficiency may not be maximal.

A practical test to determine the 'thickness' of the above target material requires two static measurements. The first determines the maximum number of product nuclei formed in a 'thick' target; the second determines the corresponding number for the target material thickness actually used. Again, a good example is the B_2O_3 wedge target (*Figure 7.6*). Due to the shape of the stepped wedge, the thickness of the B_2O_3 on the wedge is very variable and may be insufficient to reduce the beam energy adequately. Thus to obtain a 'wedge efficiency' factor, a static irradiation is carried out using a solid block of B_2O_3 thick enough to reduce the beam energy to the practical threshold level. The activity induced in this block is compared with that induced in the B_2O_3 wedge under the same irradiation conditions, care being taken in both cases to collect and measure any labelled volatile products as previously described.

2.4 CYCLOTRON BEAM CURRENT AND BEAM DISTRIBUTION MEASUREMENT

The intensity of the charged particle beam may be continuously measured during bombardment by a microammeter connected directly between the target and the frame of the cyclotron which is invariably at earth potential. The target must be well insulated from the cyclotron and have the minimum number of leakage paths to earth. If the deionized cooling water paths to earth are long, their impedance is very much higher than that of the current measuring circuit, which is usually low (typically 500 Ω). The impedance of the ionized gas in the gap between the beam exit port and the target is also higher (~ 50 kΩ) than that of the current measuring circuit. Thus the beam current may be measured fairly accurately and, if required, integrated electronically. However, any faults causing leakage to earth will result in the indication of an apparently low beam current, possibly with unfortunate results! One source of such leakage is dampness on the target mounting plate arising from leaking cooling water connections, a high humidity level in the recirculating gas cooling system, or failure to dry properly a target after an immersion leak test. Targets with wet mounting plates can also give rise to false positive or negative currents by electrolytic action.

The maximum external beam current available from most medical

cyclotrons is about 100 μA. Beam currents used for short-lived radioactive gas production vary between 5 μA and 70 μA, the maximum value usually being limited by the strength of the target beam entry foil window.

As we have seen it is very desirable to know the distribution of the charged particle beam over the area of the target foil window. This is particularly necessary when thick windows are used since large amounts of energy may be deposited locally causing excessive heating which may lead to melting of the window material.

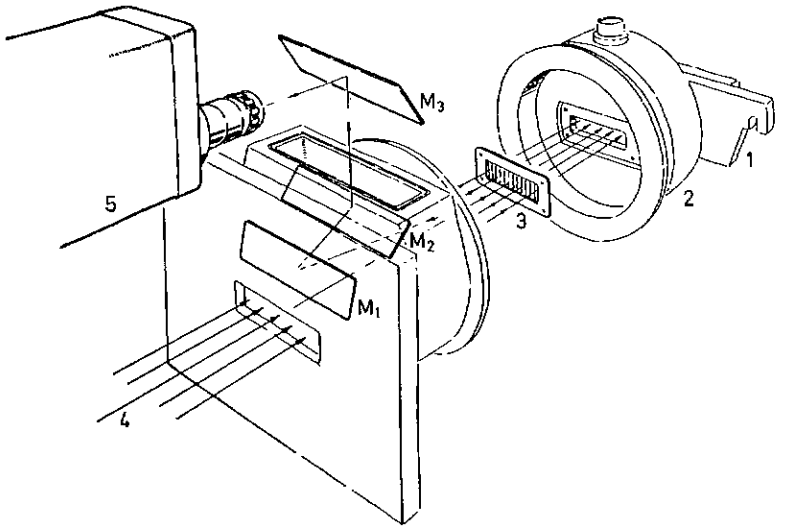

Figure 2.7 System for beam distribution monitoring: (1) target; (2) cyclotron beam exit port; (3) grid of alumina coated tungsten wires; (4) charged particle beam; (5) TV camera; M_1, M_2, M_3, surface silvered mirrors

A useful type of beam distribution monitor which gives a visual indication during bombardment is shown in *Figure 2.7*. A grid of 25 0.2 mm diameter alumina coated tungsten wires (thermionic valve heating filaments) having a 5 mm spacing is supported 2.6 cm on the vacuum side of the cyclotron beam exit window. A TV system is used to show the beam distribution indicated by the incandescence of the wires intercepting the beam. Although only a qualitative indication is obtained, this device is of value in determining the approximate beam distribution, and will indicate the presence of 'hot spots' (*Figure 2.9 (d)*).

For a more accurate assessment of beam distribution it is necessary to bombard a target for a short time and then measure the distribution of the activity induced in the beam entry foil window. Alternatively a copper or stainless steel foil, backed by a water cooled copper plate, may be bombarded. The distribution of induced activity may be measured, in the case of a well-spread beam, by cutting the foil into many small squares, measuring their activity and plotting the resulting activity pattern. When this method is used a stainless steel or copper foil should be used since radionuclides of long half-life can be induced. A less tedious procedure is to measure the complete foil with a chromatogram scanner fitted with a fine resolution collimator. The distribution of a more concentrated beam may be determined by measuring the activity pattern induced in a closely spaced (0.5–1 mm) grid of stainless steel wires positioned in place of the target foil. After a brief irradiation the grid is removed and the wires measured individually using a chromatogram scanner fitted with a fine resolution ($\sim$1 mm) collimator.

Another method (possible with an aluminium foil) is to make an autoradiograph of the target foil window and plot isodensity curves. If several different autoradiographs are made from a given foil covering a range of exposure times, it is possible to determine the density/dose relationship for a particular film and processing technique, and hence obtain true isodose curves of induced activity.

Figure 2.8 shows four typical distributions of the MRC cyclotron 16 MeV deuteron beam obtained by this method. The values given for each area are percentages of the total dose delivered to the target foil. As can be seen, the distribution can vary widely according to cyclotron operating conditions.

In practice it is often necessary to specify what the beam distribution was for a given irradiation. We have arbitrarily defined this in terms of the approximate dimensions of the central portion of the beam strike area in which 50 per cent of the charged particle beam is concentrated. This is shown by the shaded areas in *Figure 2.9*, the relative positions of incandescent wires in the beam distribution monitor (*Figure 2.7*) also being indicated. *Thus the beam distribution dimensions stated throughout this book should be interpreted with reference to this convention.*

Using the above technique, estimates may be made of the minimum, mean and peak beam power densities, at a given beam current, energy and concentration. The distributions shown in *Figures 2.8* and *2.9* were obtained using a 5 μA or 40 μA 16 MeV deuteron beam. The estimated minimum value of power density in the shaded areas ranged from 3 W cm^{-2} at 5 μA (*Figure 2.9 (b)*) to

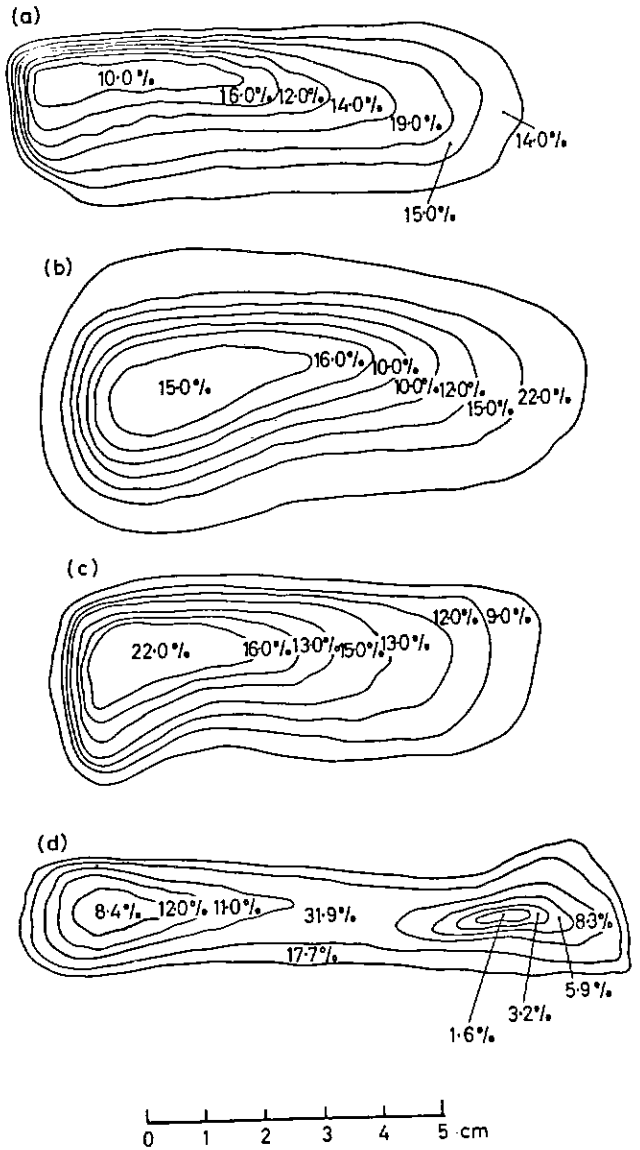

Figure 2.8(a–d) Typical distributions of the MRC cyclotron 16 MeV deuteron beam. The values given for each area are percentages of the total dose delivered to the target foil window. Irradiation conditions for (*a*), (*b*) and (*c*) were 5 μA for 10 min; (*d*) 40 μA for 50 s

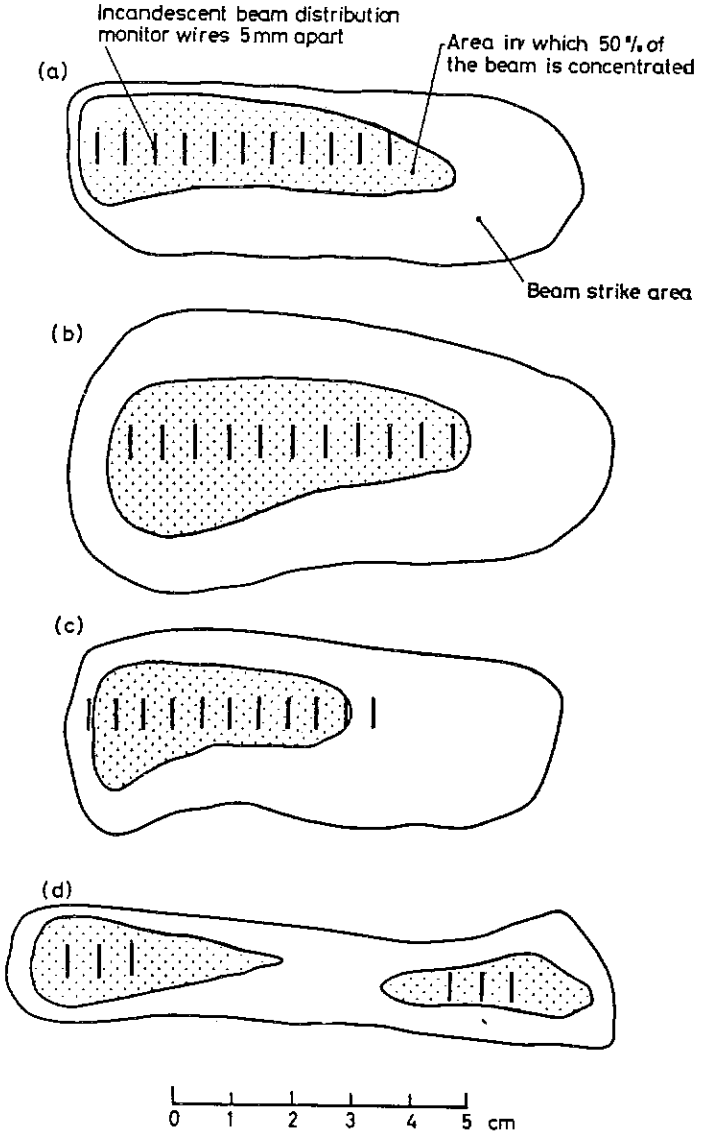

Figure 2.9(a–d) Typical distributions of the MRC cyclotron 16 MeV deuteron beam showing the central portion of the beam strike area in which 50 per cent of the beam is concentrated. The relative positions of the incandescent wires in the beam distribution monitor (*Figure 2.7*) are also shown. Irradiation conditions for (*a*), (*b*) and (*c*) were 5 μA for 10 min; (*d*) 40 μA for 50 s

48 W cm^{-2} at 40 μA (*Figure 2.9 (d)*), with peak power densities in excess of 92 W cm^{-2} at 40 μA (*Figure 2.9 (d)*).

Clearly the values of beam power density will vary widely according to the design of a particular cyclotron. If the beam is not spread, high power densities are inevitable with the ever-present possibility of early target window failure. Thus for reliable operation it is well worth the effort to determine the beam distribution under all likely cyclotron operating conditions, and hence design the targets and associated cooling systems accordingly.

REFERENCES

1 Aron, W. A., Hoffman, B. G. and Williams, F. C. (1949). *Range-Energy Curves*, 2nd revision, AECU-663 (UCRL-121). Technical Information Division, U.S. Atomic Energy Commission, Oak Ridge, Tennessee.

2 Barkas, W. H. and Berger, M. J. (1964). *Tables of Energy Losses and Ranges of Heavy Charged Particles*. NASA report SP-3013. Scientific and Technical Information Division, National Aeronautics and Space Administration, Washington, D.C., U.S.A.

3 Buckingham, P. D. and Forse, G. R. (1963). 'The preparation and processing of radioactive gases for clinical use.' *Int. J. App. Radiation and Isotopes*, **14**, 439–445.

4 Clark, J. C., Goulding, R. W., Roman, Maria and Palmer, A. J. (1973). 'The preparation of fluorine-18 labelled compounds using a recirculatory neon target.' *Radiochem. and Radioanalyt. Letters* **14**, 101.

5 Friedlander, G., Kennedy, J. W. and Miller, J. M. (1966). *Nuclear and Radiochemistry*, 2nd edn., p. 61. New York; Wiley.

6 *Ibid.*, pp. 95–8.

7 International Commission on Radiation Units and Measurements (1969). *Neutron Fluence, Neutron Spectra and Kerma*. I.C.R.U. report 13, p. 10. 4021 Connecticut Avenue, NW Washington, D.C. 20008.

8 Lamb, J. F., James, R. W. and Winchel,, H. S. (1971). 'Recoil synthesis of high specific activity ^{11}C—cyanide.' *Int. J. Appl. Radiation and Isotopes* **22**, 475–9.

9 Palmer, A. J., Clark, J. C., Goulding, R. W. and Roman, M. (1973). 'The Preparation of ^{18}F labelled DL-3-fluorotyrosine.' *IAEA/WHO Symposium on New Developments in Radiopharmaceuticals and Labelled Compounds*, Copenhagen, March 1973. IAEA No. STI/PUB/344 Vol I.

10 Williamson, C. F., Boujot, J. P. and Picard, J. (1966). *Tables of Range and Stopping Power of Chemical Elements for Charged Particles of Energy 0.05 to 500 MeV*. Premier Ministre Commissariat a L'-Energie Atomique. Rapport CEA-R 3042. (Available from Documentation Française Secretariat General du Government, Direction de la Documentation, 16 rue Lord Byron, Paris VIII ème.)

11 Wolf, A. P., Christman, D. R., Fowler, J. S. and Lambrecht, R. M. (1973). 'Synthesis of radiopharmaceuticals and labelled compounds utilizing short-lived isotopes.' *IAEA/WHO Symposium on New Developments in Radiopharmaceuticals and Labelled Compounds*, Copenhagen, March 1973. (Section on $^{18}F_2$ production.) IAEA No. STI/PUB/344 Vol I.

The Processing of Short-Lived Radioactive Gases

3.1 INTRODUCTION

Whether they are produced continuously or batch-wise, short-lived radioactive gases invariably require some form of processing before they can be used clinically. In this context the term processing includes any change which the gas undergoes between being produced and being dispensed.

In one case processing may simply mean the dilution of the radioactive gas with an inactive gas to reduce its radioactive concentration; in another case it may mean the removal of contaminating radioactive gases and a change of its chemical form or physical state to make it suitable for a specific clinical investigation. For example, the gas may be required in saline solution suitable for intravenous injection. In some sophisticated clinical studies two different radioactive gases are used simultaneously; this requires the production and storage of the longer-lived gas followed by the immediate production of the shorter-lived one.

All processing of radioactive gases should be carried out in a well-shielded room having forced ventilation. Ideally the extract fan exhaust should be continuously monitored with a flow type radiation detector. In the processing room are situated absorbers, furnaces and all radioactive gas handling equipment that is required between the cyclotron target and the dispensing fume cupboard. The processing room may also house the scavenge pump for waste gas disposal.

3.2 CONTAMINANTS

It is essential that radioactive gases for clinical use are substantially free from radioactive and non-radioactive contaminating gases.

Radioactive contaminants are undesirable, since as well as giving the patient an unnecessary radiation dose, they may seriously influence the measurement being made. Inactive contaminating gases may cause physiological changes which may affect the diagnosis or even constitute a hazard to the patient.

3.2.1 Radioactive Contaminants

Radioactive contaminating gases are frequently produced together with the required radioactive gas. Almost without exception, the elements that are used as target materials for short-lived radioactive gas production have two or more stable nuclides. Hence, radioactive contaminants are likely to be produced as the result of undesired nuclear reactions with nuclides other than the target nuclide (e.g. $^{85}Kr^{m}$ production: $^{78}Kr(d,p)^{79}Kr$ and $^{86}Kr(d,p)^{87}Kr$). Radioactive contaminants may also be formed by undesired nuclear reactions taking place with the target nuclide itself (e.g. ^{15}O production: $^{14}N(d,\alpha n)^{11}C$ and $^{14}N(d,dn)^{13}N$). Yet another source of contaminating radionuclei may be the irradiation of elements other than the target element (e.g. ^{11}C production using B_2O_3 as a target material: $^{16}O(d,\alpha n)^{13}N$, see also Tables 2.1 and 3.1). This may be unavoidable when the target material is a compound or when a composite sweep gas is used. High purity target materials and gases can often be used advantageously.

Table 3.1 lists some radioactive contaminating gases which have been observed at the target output by the authors during production bombardments (see also chapters 5–8).

The Prevention and Removal of Radioactive Contaminants

The formation of contaminating radionuclei can sometimes be prevented by the use of beam energy degrading filters (section 2.2.2 and Table 2.1). In some cases it may be advantageous to use a different incident particle, or in the case of a continuously swept target, a different sweep gas composition or flowrate, or even an isotopically enriched target material.

When it is impossible or uneconomic to prevent the formation of radioactive contaminants or separate them chemically (e.g. ^{87}Kr in $^{85}Kr^{m}$), their level can often be reduced by allowing the shorter-lived nuclide to decay. Other methods include the use of reagents at ambient or elevated temperatures, sorption pumping, and condensation at reduced temperatures (Table 3.2).

3.2.2 Inactive Contaminants

Inactive contaminating gases may be present as impurities in the

target gas or sweep gas or both. Other sources include leaks and diffusion through non-metallic gas transmission tubes. Incomplete flushing of targets and gas transmission tubes and the use of absorbers and traps from which foreign gases have not been expelled before use, can also contribute to the level of stable con-

TABLE 3.1

SOME RADIOACTIVE CONTAMINATING GASES PRODUCED AT THE TARGET OUTPUT IN TYPICAL PRODUCTION BOMBARDMENTS

Desired product	*Radioactive contaminant*	*Reference*
^{15}OO	$C^{15}O$ $C^{15}OO$ $N_2{}^{15}O$ $N^{15}OO + {}^{15}OOO$ ^{13}NN	Section 5.4.1, p. 136 Table 5.4
$C^{15}OO$	^{15}OO $C^{15}O$ $N_2{}^{15}O$ ^{13}NN	Section 5.4.2, p. 140 Table 5.5
^{13}NN	$C^{15}O$ $C^{15}OO$ ^{13}NNO $^{13}NO_2$ $HC^{13}N$	Section 6.2, p. 172 Table 6.2
^{11}CO	^{13}NN $^{11}CO_2$ $^{11}CH_4$	Section 7.3.2, p. 231 Table 7.5
$^{11}CO_2$	^{15}OO ^{13}NN ^{11}CO	Section 7.4, p. 237 Tables 7.6 and 7.7
$^{81}Kr^m$ (solution generator)	(^{81}Rb) ($^{82}Rb^m$) ^{79}Kr $^{83}Kr^m$ (^{18}F)	Section 8.4.3, p. 286 and section 8.4.5, p. 288
$^{85}Kr^m$	^{79}Kr ^{87}Kr	Section 8.3, p. 270 Table 8.2

taminants present. There is also evidence to indicate that under certain conditions, measurable quantities of stable gas may be formed by the radiolytic combination of gases within the target, e.g. ^{15}O production: $2N_2 + O_2 \rightsquigarrow 2N_2O$[1]. (See also section 6.3.1, page 200.)

The Prevention and Removal of Inactive Contaminants

As has been indicated, the use of high purity gases, diffusion free gas transmission tubes and a leak free well-engineered and properly

TABLE 3.2

SOME REAGENTS USED IN RADIOACTIVE GAS PROCESSING SYSTEMS

Chemical form of contaminant or gas to be removed or converted	*Reagent*	*Reagent temperature*		*Typical application*
NO_2, CO_2, O_3, HCN	Soda lime	Ambient		$^{15}O_2$, $C^{15}O$, $^{13}N_2$ and ^{11}CO production systems
N_2O	Activated charcoal	Ambient		$^{15}O_2$ production system
NO_2	Copper	Ambient		$^{13}N_2$ solution production systems
H_2O	Magnesium perchlorate $Mg(ClO_4)_2$	Ambient		Batch-wise conversion of ^{11}CO to $^{11}CO_2$. Used as a drying agent at CuO furnace output
CO_2	Sodium hydroxide solution 5N. NaOH	Ambient		$^{13}N_2$ solution production systems. Also ^{79}Kr and ^{127}Xe systems. Used as CO_2 absorbing agent
CO	Copper oxide	Hot	~ 700°C	$^{13}N_2$ solution production system. Used for conversion of graphite matrix target gas to CO_2
O_2 and H_2	Palladium (catalyst)	Hot	~ 150°C	$H_2{}^{15}O$ production system
CO_2	Zinc powder	Hot	390°C	^{11}CO production system. Used for conversion of target output gas to CO
O_2, N_2O	Activated charcoal	Hot	400°C 900°C	$C^{15}O_2$ and $C^{15}O$ production systems
CO, Kr	Molecular sieve	Cold	−72°C −196°C	^{11}CO storage system. $^{85}Kr^m$ system. Sorption pumping
CO	Activated charcoal	Cold	−196°C	^{11}CO storage system

used gas handling system will ensure that the level of inactive contaminants is kept to a minimum. Many of those that remain can be removed by the use of reagents at ambient or elevated tempera-

tures, sorption pumping or condensation at reduced temperatures. However, these measures can result in the loss of some of the required activity.

3.2.3 The Detection and Measurement of Contaminants

Radio-gas Chromatography

A gas chromatograph fitted with a radiation detector (sometimes referred to as a radio-gas chromatograph) is an invaluable instrument for the detection and measurement of many stable and radioactive gases[6,12]. A block schematic diagram of this intrument

TABLE 3.3

TYPICAL GASES WHICH MAY BE ANALYSED BY A GAS CHROMATOGRAPH USING VARIOUS COLUMN PACKING MATERIALS

Column packing material	*Order of elution of gases*
Molecular sieve 80–100 mesh (type 5A) 50–150°C	$(A+O_2)$* N_2 CH_4 CO NO_2 and O_3 retained
Poropak Q† 80–100 mesh 25–150°C (T_{max} = 250°C)	$(A+O_2+N_2+CO+CH_4)$* NO CO_2 N_2O NH_3 H_2O HCN NO_2 and O_3 retained
Silica gel 80–100 mesh 50–150°C	$(A+O_2+N_2)$* CO (CO_2+N_2O)* NO_2 and O_3 retained

* Eluted as one peak.
† Supplied by Waters Associates Inc., 61 Fountain Street, Framingham, Massachusetts, U.S.A.

is shown in *Figure 3.1*. The carrier gas is either hydrogen or helium, the latter being preferable where possible. The column packing materials shown give good separation of many of the gases listed in Table 3.3.

Whilst the thermal conductivity detector (commonly known as a katharometer) is used for the detection of stable gases, various kinds of detector are used for the detection of the radioactive components. The two basic types are the scintillation counter and the internal proportional counter[20]. Both types detect the β emissions from the radioactive gas as it flows through the counter, the output gas from the katharometer being passed to the radiation detector.

In the scintillation β detector the gas passes through a small

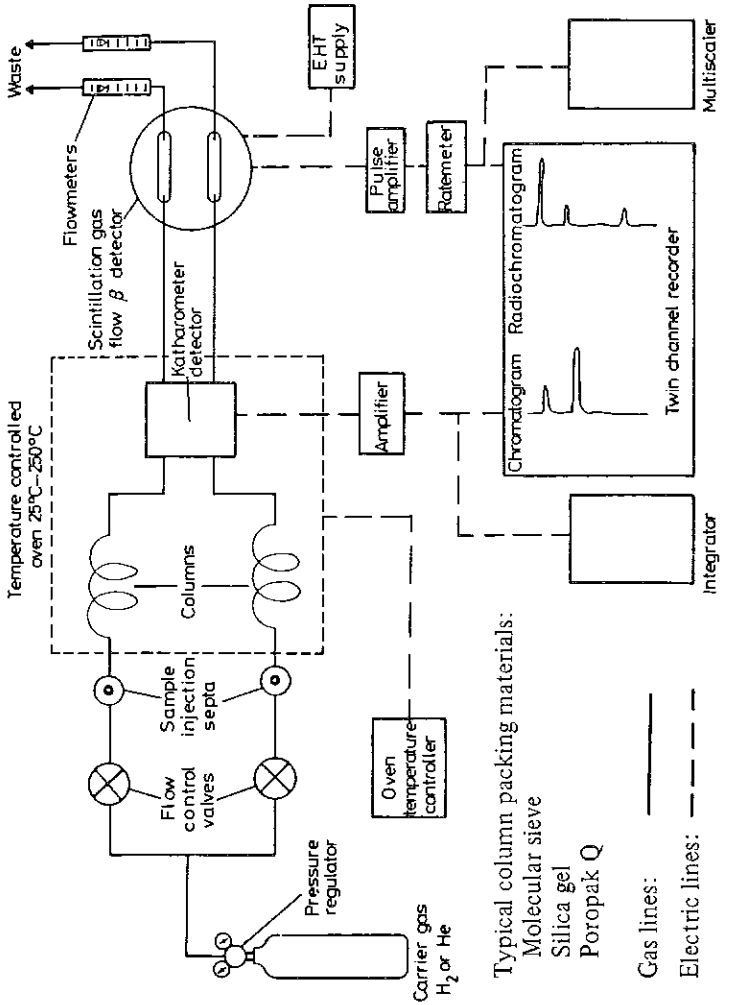

Figure 3.1 Block schematic diagram of a radio-gas chromatograph

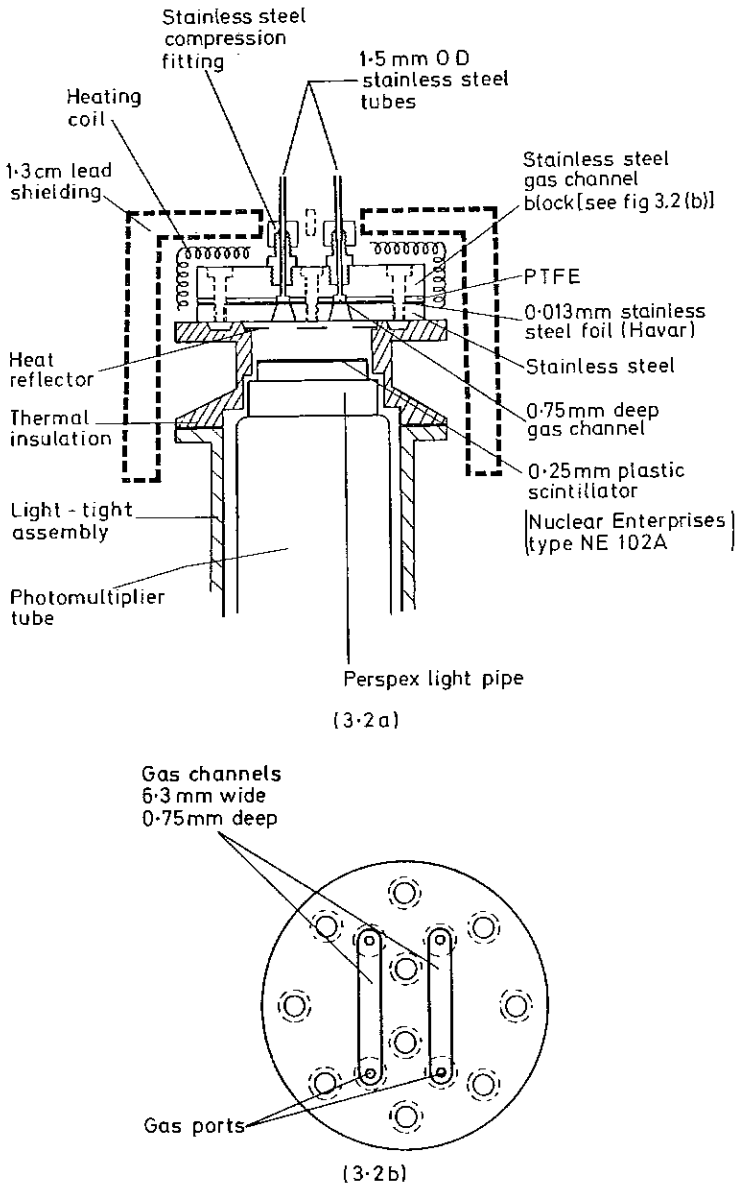

Figure 3.2 Scintillation gas flow beta detector for use with a radio-gas chromatograph showing: (*a*) general assembly; (*b*) underside view of stainless steel gas channel block

stainless steel cell with a thin window through which the β particles are emitted. The β particles are then detected using a thin plastic scintillator* and photomultiplier. A typical layout of this type of detector is shown in *Figure 3.2*. When the cell is operated at elevated temperatures (up to 150 °C) care should be taken to keep the photomultiplier as cool as possible. If the photo-cathode is allowed to heat up, electrons are emitted from it giving rise to thermal noise. This noise can to some extent be discriminated against in the subsequent amplifier discriminator system. The efficiency of the scintillation detector varies with β particle energy and this must be taken into account when nuclides having different β energy emissions are being measured. The limit of detection of a gas chromatograph fitted with a katharometer and scintillation type β detector is about 0.1 per cent for both stable and radioactive gases.

Another type of scintillation counter uses a sodium iodide crystal in conjunction with a PTFE spiral through which the active gas passes. For use with organic compounds the spiral may be heated to a maximum temperature of 200 °C. However, this type of detector is suitable only for the detection of γ-rays.

The double-sided window flow proportional counter is eminently suitable for β particle detection being relatively insensitive to variations in β particle energy and having a low γ sensitivity. The active gas is passed through a long shallow rectangular volume formed by the thin flat windows of two proportional counters of semi-circular cross-section[20]. It is suitable for use at up to at least 125 °C and with care can be used at up to 200 °C[21], the length of the plateau decreasing as the temperature is increased. A further advantage is its high sensitivity. However, this type of counter does need an additional gas supply.

Whichever type of radiation detector is used it is essential that the carrier gas flow rate through it is constant, irrespective of which column is in use. This is achieved by preset adjustment of the flow control valves at the column inputs, the flow rates being measured by the bubble flowmeter at the β detector output, or for the most precise work, using an electronic flow rate feedback system[19].

The twin-channel recorder displays both the stable and radioactive components of a gas sample virtually simultaneously; the use of an integrator and multiscaler facilitates rapid quantitative data analysis. During subsequent computation on this data, due allowance must be made for the different decay constants of the radioactive components of a gas sample as they pass through the chromatograph (see Appendix 2).

* Type NE 102A supplied by Nuclear Enterprises Ltd, Edinburgh, Scotland.

Decay Curve Analysis

Decay curve analysis is a valuable technique to differentiate between radionuclides of different half-life ($T_{\frac{1}{2}}$). Using this technique, the components and their proportions in a mixture of radioactive nuclides, for example, ^{15}O ($T_{\frac{1}{2}} = 2.07$ min) and ^{11}C ($T_{\frac{1}{2}} = 20.3$ min) may be assessed by observing the radioactive decay of a sample and plotting the resulting composite decay curve. The component with the shortest half-life decays most rapidly, the 'tail' of the curve being due to the longer-lived nuclide. Analysis is carried out by subtracting the longer-lived component from the composite curve, allowance being made for background (see Appendix 4).

The decay measurement may be made using a variety of calibrated detectors having either analogue or digital readout. A commonly used instrument is an ionization chamber of either the atmospheric or high pressure type. Alternatively a scintillation counter may be used having either a sodium iodide or plastic scintillator.

Decay curve analysis can often be advantageously used to identify the label(s) of a particular peak obtained during radio-gas chromatographic analyses; the gas flow through the radiation detector is stopped when the peak is at its maximum and the radioactive decay curve is observed.

Gamma Ray Spectrometry

Gamma ray spectrometry is used for the identification and assay of a specific radionuclide or mixture of radionuclides emitting gamma rays with a wide range of energies. It is of particular value for the analysis of target materials (section 2.3, page 37) and target effluents which contain a mixture of γ emitting radionuclides (section 8.3.5, page 277). Another application is the calibration of ionization chambers (section 3.7, page 79 and section 8.3.4, page 276).

A modern gamma ray spectrometer consists basically of a high resolution detector of γ-rays, for example a Ge/Li semiconductor detector coupled through a linear amplifier to a multichannel analyser (MCA) with a suitable readout facility. The pulse height at the amplifier output is proportional to the energy absorbed. These pulses are fed to a MCA which sorts the pulses according to their height and stores them in a series of scalers (channels). At the end of data acquisition the contents of these channels may be inspected in an analogue fashion using an oscilloscope readout. This aids initial γ photo-peak identification. Subsequently the channel contents are processed digitally to obtain quantitative information.

The accurate use of a gamma ray spectrometer entails the use of standard calibration sources for energy *versus* channel number

correlation. These sources are also used to determine the detector sensitivity for gamma rays of different energies. It is important that a high degree of system stability is maintained. When an assay is being carried out it is important to maintain the same or closely similar conditions to those under which the calibration was performed. Thus, volumes of samples, their geometry, maximum count rates and methods of peak integration all need careful consideration.

The use of gamma ray spectrometry for assay purposes is further described in section 8.3.5 (page 277).

Mass Spectrometry

The mass spectrometer is a widely used instrument for the analysis of trace stable gases, its principle being that it will separate rapidly moving charged gas molecules (ions) according to their masses. The gas sample to be measured is introduced into an evacuated chamber where it is ionized by a beam of electrons. The resulting ions are accelerated by a high potential in an 'ion gun' from which they emerge as a collimated beam. This beam is directed towards a collector electrode through a powerful magnetic field which causes the ions to be fanned out into a family of circular paths. The radius of the path described by a particular ion is proportional to its mass to charge ratio. The construction of the apparatus is such that the only ions which gain access to the collector electrode are those with trajectories of a prescribed radius of curvature. By altering the accelerating potential or the strength of the magnetic field, ions of different mass to charge ratios may be collected. The resulting signal received by the collector is amplified electronically and displayed by a chart recorder or cathode ray oscilloscope.

It should be noted that the mass spectrometer cannot differentiate between a singly charged ion of a given mass and a doubly charged ion of twice the mass, since the mass to charge ratio is the same in both cases. However, the gas chromatograph is capable of separating gases which can give rise to such ions. Thus, a gas chromatograph used in conjunction with a mass spectrometer form a powerful combination for the analysis of a wide range of volatile substances.

Solution Wash-out Measurements

This type of measurement is useful for the determination of soluble radioactive contaminants in solutions containing poorly soluble radioactive gases such as $^{13}N_2$ or the inert gases. A typical solution is prepared and its initial activity noted. The poorly soluble gas is then washed out of solution by bubbling with a gas, preferably of

the same chemical species. The initial activity falls rapidly to a value determined by the contaminant level (*Figure 6.16*).

It is desirable that the instrumentation used for this type of measurement has a time constant which is short compared to the maximum rate of activity wash-out (see section 3.7.4, page 84). A typical solution wash-out measurement is described in section 6.3.1 (page 199).

Quantitative Removal by Specific Reagents

Trace stable and radioactive contaminants can sometimes be determined by their quantitative removal and subsequent measurement in specific reagents. For instance, $C^{15}O_2$ ($C^{15}OO$), $^{15}O_3$ (^{15}OOO) and $N^{15}O_2$ ($N^{15}OO$) are all quantitatively absorbed by soda lime, the $^{15}O_3$ being decomposed to $^{15}O_2$ (^{15}OO) which is subsequently released[15]. Thus, this reagent may be used for determining the presence of these labelled gases. An example of the use of this technique is given in section 5.3.1 (page 130).

Methods for trace stable gas estimation use colorimetric microdetermination techniques. In the Saltzman test[18] NO_2 is reacted with the Saltzman reagent[3] producing a stable red-violet colour which can be measured spectrophotometrically (section 5.3.2, page 134). The Nessler test is used for the microdetermination of stable ammonia[2]. In this the ammonia is reacted with an alkaline solution of mercuric iodide and potassium iodide to form a reddish-brown colloidal compound which may be measured spectrophotometrically (section 5.4.4, page 156).

3.3 THE TRANSMISSION AND FILTRATION OF GASES

As we have seen, in all dynamic radioactive gas systems the product nuclide has to be removed from the target by a sweep or sweep/target gas and conveyed to the dispensing point. Often it is necessary to change its chemical form in transit using absorbers at either elevated or ambient temperature. Having been dispensed, the radioactive gas may be stored or used for the preparation of radioactive solutions, in which case it must contain the minimum of trace stable contaminating gases. Sometimes the product nuclide is very short-lived (e.g. ^{15}O, $T_{\frac{1}{2}} = 2.07$ min) and may have to be transmitted over a long distance. Thus high gas flow rates may be required necessitating the use of a high system pressure or even the use of a pump (see *Figure 5.2* and section 3.11.3). The desired radioactive gas may be present only in trace ('carrier free') amounts or be likely to react with

the gas transmission tubes, or both. Thus many factors have to be taken into account when selecting materials for the transmission of radioactive gases.

A typical radioactive gas production system (^{11}CO) using a high pressure target is shown schematically in *Figure 3.3* together with the approximate lengths of gas transmission tube used and the pattern of pressure change throughout the system. It will be seen that the input flowmeter A, the target, and the gas transmission tubes to and from the cyclotron are all maintained at a relatively high pressure by the needle valve. Thus a 'thick' target in the nuclear sense is provided, and if small bore gas transmission tubes are used, the product nuclide is rapidly transmitted to the furnace and rest of the processing system which is at a lower pressure. It is desirable that this lower pressure is maintained, especially at flowmeter B, the yield measuring spiral and the dispensing and waste gas taps. This ensures accurate flow and activity measurement and the maintenance, by the scavenge pump, of a slight vacuum at the input of the scavenging gas flowmeter C. (For clarity only one scavenge pump is shown.) The scavenging gas tank provides a vacuum reservoir which copes with any sudden large changes in flow rate such as could occur by rapid manipulation of the needle valve, or the exhausting of waste target cooling air directly into the system (see *Figure 3.16*). Since it is desirable for the scavenging gas flow rate to be about one hundred times the sweep gas flow rate, the impedance of the gas transmission tubes at this point in the system should be minimal. The waste gas is finally discharged from a chimney into the atmosphere (see section 3.9, page 86).

To achieve the short transit times generally required the tubes used for gas transmission to and from the target should be of small bore* (1–3 mm) and may be made of either metal or plastic. Materials in common use are stainless steel, copper, nylon and polytetrafluoroethylene (PTFE). Because of their relatively high permeability to many gases the use of polyethylene, polyvinylchloride (PVC) and silicone rubber should be avoided, silicone rubber being particularly pervious to water, O_2 and CO_2[5,17]. Although the permeability of nylon to water and CO_2 is tolerable, air will diffuse through and this may preclude its use in certain cases, for example $^{13}N_2$ solution preparation (section 6.3, page 191) and ^{11}C storage systems (section 7.6, page 246). Some gases are irreversibly adsorbed by certain metals. For instance, trace amounts of NO_2 and NH_3 are known to be adsorbed on copper surfaces (see sections 5.3, page 130 and 7.2.2,

* When hydrogen is used as a sweep gas the impedance of the gas transmission tube to the target should be minimal (see section 7.3.2, page 232).

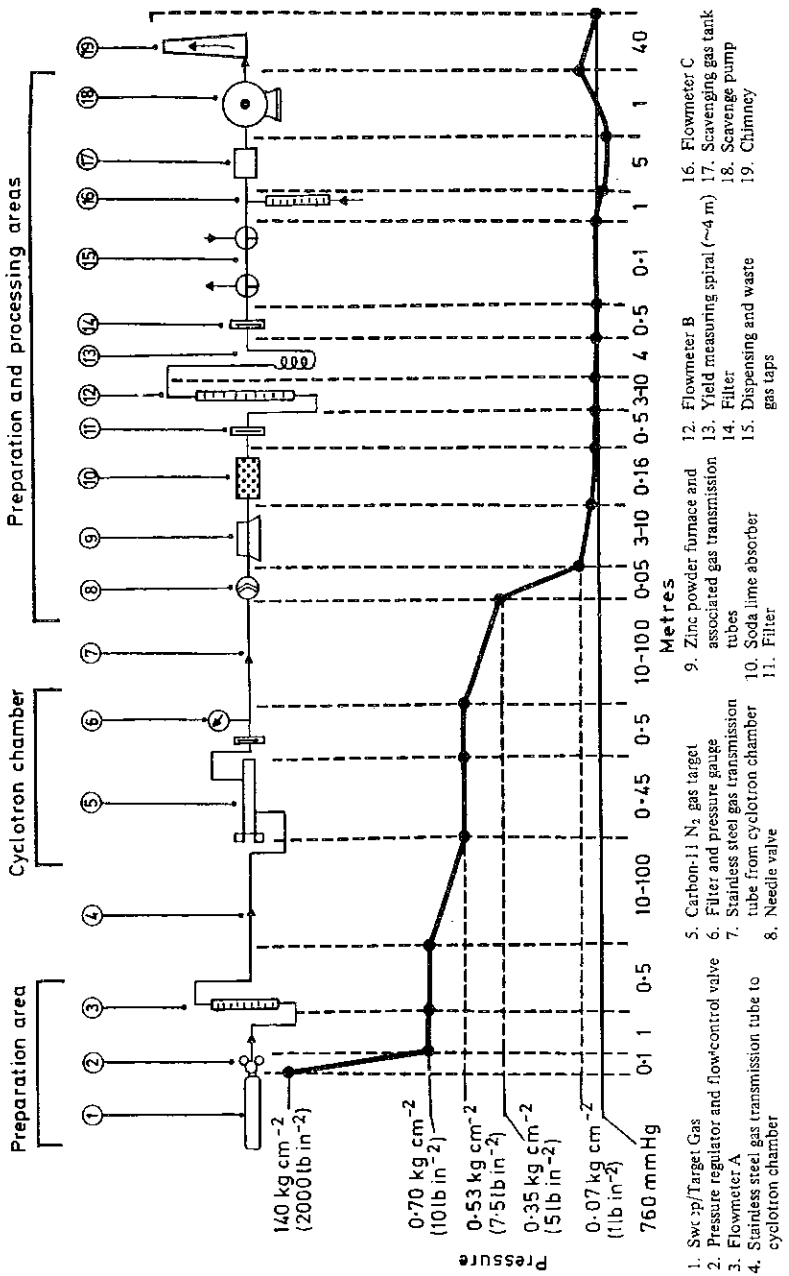

Figure 3.3 Schematic layout of components in a typical (^{11}CO) radioactive gas production system. The pressure pattern throughout the system is shown together with typical distances between the components

page 227). Undesirable chemical reactions can also occur with this material. Thus, metal gas transmission tubes should also be chosen with care. The authors have found stainless steel to be a satisfactory material for many applications, although it can be difficult to install since once kinked, it will easily break. Nylon is also a useful material being easier to install than stainless steel and can be successfully used in certain cases. However it is liable to long-term radiation damage and is particularly prone to chemical attack by O_3 and NO_2. Where flexible connections are needed, short lengths (< 2 m) of nylon can usually be used in a stainless steel system.

The choice between stainless steel and nylon is often determined by their relative cost and availability. Polytetrafluoroethylene is a particularly useful material when a relatively inert gas transmission tube is needed. It is easily damaged however, necessitating considerable care during installation.

Since the transit time for most continuously produced radioactive gases has to be as short as possible, the bores of the tubes should be kept small consistent with a safe target working pressure. The relationship between pressure, bore, length and flow rate for some stainless steel and nylon gas transmission tubes is shown in Table 3.4. Transit times may readily be estimated using a bolus of radioactive gas.

The principal factors which determine the maximum working pressure in a gas transmission system are the dimensions and material of the target beam entry foil. The authors have found that a system input pressure of about 10.5 kg cm^{-2} ($\sim$ 150 lb in^{-2}) gauge is quite possible (see section 2.2.1).

An exception to the use of small bore tubes in gas systems is the main waste pipe. This should be of relatively large diameter ($\nless$ 2.5 cm), maintained at all times at a slight vacuum by a scavenge pump and be capable of coping with the maximum flow rate of effluent gas the system is ever likely to produce (section 3.9, page 86). Nylon is quite suitable for the waste pipe.

High quality fittings should be used for gas tube connections. For metal tubes, vacuum connections with 'O' rings (for hand tightening) and compression joints (for permanent connections) have proved successful, the brass vacuum fittings being brazed to the tubes. Nylon tubes may be satisfactorily connected using compression fittings of well-proven design in conjunction with the correct size tubing. Polytetrafluoroethylene tube may be joined by flaring the ends and using a flange fitting (see section 3.11.2, page 96).

Whether the gas transmission tubes are metal or plastic they should be fitted in a protective installation. Cable ducting and large

bore steel conduit have both been used successfully. Plenty of inspection panels are required for ease of installation and possible future alterations to the system.

Although the volume of a radioactive gas tube is small, the dose rate can be significant, especially near tubes carrying undiluted radioactive gases. A section of a typical installation may consist of

TABLE 3.4

THE RELATIONSHIP BETWEEN INPUT PRESSURE, BORE, LENGTH AND GAS FLOW RATE FOR STAINLESS STEEL AND NYLON GAS TRANSMISSION TUBES

Tube material	*Bore* mm	*Length* m	*Gas*	*Input pressure* kg cm^{-2}	*Input pressure* lb in^{-2}	*Output pressure* mm Hg	*Flow rate at output* ml min^{-1}
Stainless steel	1.5	120	N_2	0.070	1.0	760	26
				0.13	1.8		51
				0.14	2.0		57
				0.21	3.0		88
				0.24	3.4		101
				0.28	4.0		122
				0.35	5.0		156
Stainless steel	1.5	490	N_2	0.28	4.0	760	30.9
				0.42	6.0		50.2
				0.56	8.0		70.7
				0.70	10		93.5
				0.84	12		119
				0.91	13		133
				0.99	14		146
Nylon	2.0	120	N_2	0.018	0.25	760	20
				0.14	2.0		130
Nylon	2.8	52	N_2	0.018	0.25	760	140
				0.070	1.0		480
				0.15	2.1		950
Nylon	4.7	130	N_2	0.018	0.25	760	480

a steel conduit (3.8 cm diameter, 1.9 mm thick) fixed to a concrete wall, the conduit containing a stainless steel gas transmission tube (2.2 mm diameter, 1.5 mm bore). The dose rate measured at 15 cm from a 2 m length of such conduit is 6 mR h^{-1} when the transmission tube contains a β^+ emitting gas having a radioactive concentration of 0.1 mCi ml^{-1}. Where necessary the installation can be planned to include some radiation shielding or routed away from regions used frequently by personnel.

Simple filters for gas transmission systems may be made using glass fibre filter papers and sintered polyethylene as shown in *Figure 3.4*. Where the gas has to be continuously sterilized a filter such as the Millipore gas line type is suitable (see section 4.1.3, page 106). Alternatively, the gas may be heat sterilized at 190 °C[4].

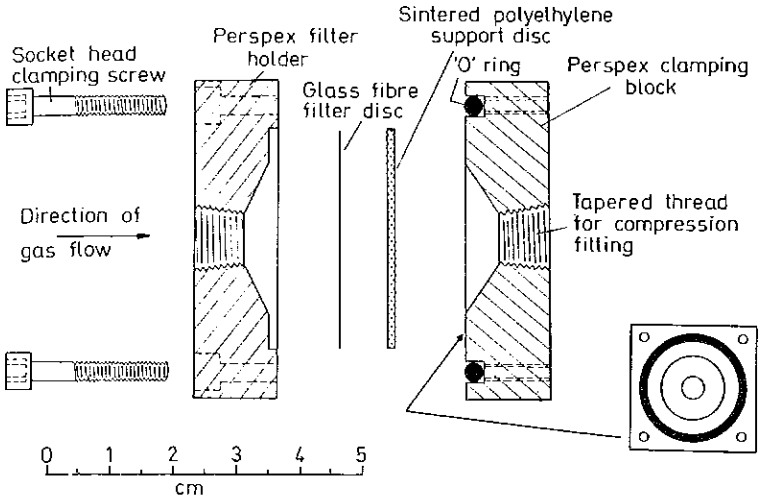

Figure 3.4 Gas transmission tube filter

3.4 THE MEASUREMENT AND CONTROL OF GAS PRESSURE AND FLOW RATE

3.4.1 Pressure Measurement

Pressures in continuous flow radioactive gas systems rarely exceed ~ 4 kg cm^{-2} (~ 57 lb in^{-2}) above atmospheric pressure. In some types of radioactive gas storage or sorption pumping system the pressure may reach 140 kg cm^{-2} (~ 2000 lb in^{-2}) above atmospheric pressure, whilst pressures the order of 2 mm Hg absolute are used in sorption pumping. This range of pressure is well within the capability of the Bourden tube gauge. Consequently this type of instrument is almost universally used in radioactive gas systems.

Although manometers are occasionally used for checking pressures in a system, they should not be permanently incorporated into the equipment since excess pressure could result in activity being released into the atmosphere.

3.4.2 Pressure Control

Since gases are supplied in cylinders at pressures up to 176 kg cm^{-2} (2500 lb in^{-2}), the use of pressure regulators (pressure reducing valves) is an absolute necessity. Several types are available; all use some form of pneumatic servo balancing in which the downstream regulated pressure is sensed by a diaphragm or similar device, the movement of which adjusts the flow from the gas supply. The more sophisticated models use two stages and are fitted with input and output pressure gauges. In this type the cylinder pressure is reduced automatically to a preset intermediate pressure in the first stage which feeds gas at a relatively stable pressure to the second stage which is adjustable for the required delivery pressure. The two stages result in a degree of control which permits unvarying delivery pressure until the cylinder is almost empty.

In the single stage type the cylinder pressure is reduced directly to the adjustable delivery pressure.

Where a very low output pressure is required it may be advantageous to use a low pressure regulator. These are generally of the single stage type and can give sensitive and accurate low pressure control in the range 0.007–0.28 kg cm^{-2} (0.1–4 lb in^{-2}) gauge. Low pressure regulators usually have a maximum input pressure of about 17.6 kg cm^{-2} (250 lb in^{-2}) gauge. It is therefore necessary to either restrict the cylinder pressure to this value, or preferably use a normal single or two stage pressure regulator to supply the low pressure regulator.

The most useful ranges of regulator output pressure for radioactive gas systems are 0–0.7 kg cm^{-2} (0–10 lb in^{-2}) and 0–4.2 kg cm^{-2} (0–60 lb in^{-2}). Pressure regulators should be fitted with flow control valves (needle valves) to enable the output gas flow rate to be varied (see section 3.4.4, page 63).

3.4.3 Flow Measurement

Typical flow rates in radioactive gas systems range from about 0.4 ml s^{-1} to 80 ml s^{-1} (24 ml min^{-1} to 4800 ml min^{-1}). It is essential to be able to measure the gas flow rate at various points in the system using instruments which offer the minimum impedance to the gas flow.

The most widely used flow measuring device is the variable area flowmeter commonly known as a rotameter.* With only one moving part it is invaluable for the continuous direct measurement of flow rate. Models are available which will measure down to 0.083 ml s^{-1}

* Supplied by GEC-Elliot Process Instruments Ltd, Rotameter Works, Croydon CR9 4PG, England.

(5 ml min^{-1}) (air) to an accuracy of ± 2 per cent. The dynamic range of a given flowmeter is usually about 10:1.

The principle of the variable area flowmeter is that a lightweight conical float in a precision tapered tube will be supported at a given height by an upward stream of gas. Since, to maintain a constant pressure difference across the float its height will vary with flow rate, a direct indication of flow rate is obtained. The indication from this type of flowmeter is affected by the density and viscosity of the gas passing through it. Variable area flowmeters are available either scaled in metric units and supplied with a calibration curve, or scaled to be direct reading for use with a given gas at a specified pressure and temperature. If the operating conditions are different from those specified on a direct reading flowmeter, calibration curves must be drawn. Variable area flowmeters are unaffected by excess flowrates and are available with viscosity and density compensated floats[14].

Another device for flow measurement uses a capillary constriction across which the pressure difference is measured manometrically[10].

The bubble or soap film flowmeter can be used for the absolute measurement of gas flow rate[10]. In use, the gas displaces a film of soap solution up a burette of known volume, the passage of the film between volume calibration marks being timed. The impedance of the bubble flowmeter is extremely low and gas flow rates as low as 10 ml hr^{-1} can be measured. However, it is unsuitable for use with soluble gases at extremely low flow rates.

Other types of indicator available include the electronic flowmeter in which the gas flow is arranged to cool a thermistor. Flow rates down to 1 ml min^{-1} may be continuously measured, the instrument being calibrated for a given gas. A dynamic range of 50:1 is typical, the pressure drop at high gas flows being as low as 2 cm H_2O. Both local and remote indication are possible with electronic flowmeters; provision is easily made for the operation of chart recorders or warning relays.

An ingenious electro-mechanical flowmeter is described by Welch *et al*[19]. Designed basically for accurate flow measurement in radio-gas chromatography, it utilizes a variable capacitance pressure transducer to operate a motor driven servo mechanism which actuates a pulse counter.

3.4.4 Flow Control

Various degrees of flow control can be effected by the use of needle valves, diaphragm valves and taps. Flow control from a gas cylinder is obtained by a flow control valve (needle valve) at the outlet of

the pressure regulator, or by means of a control valve in the pipeline downstream from the regulator. In general, flow control should not be attempted by adjusting the regulator output pressure to obtain different flow rates. This defeats the purpose of the pressure regulator and in some cases where high flow rates are obtained in this manner, the pressure setting may be in excess of the design pressure of the system.* Generally speaking, the pressure regulator should be set (with the flow control shut) to the lowest usable pressure, the flow control valve then being used to obtain the range of flow rate required.

In some cases it is undesirable to have a high impedance at the pressure regulator output (see section 7.3.2, page 232). A solution here is to use a low pressure regulator as described in section 3.4.2 (page 62) in conjunction with a low impedance control valve at the regulator output.

To prevent the build-up of dangerous pressures, a pressure regulator should always be used on a given system unless the gas cylinder pressure is within the system's safe working pressure.

Needle valves should be of high quality. A particularly useful type is the calibrated needle valve fitted with a multi-turn geared mechanism or micrometer screw, which allows precise reproducible control over the whole range of operation.

Diaphragm valves are particularly suitable for use with radioactive gases since they are completely sealed, those using metal diaphragms being preferable since they are resistant to radiation damage. However, they do not have the fine degree of control which needle valves have and are thus more suitable for applications requiring relatively large changes of flow rate (see section 3.11.1, page 94).

3.5 FURNACES, ABSORBERS AND COLD TRAPS

3.5.1 Furnaces

Furnaces are used in radioactive gas processing systems for converting the primary product into the desired chemical form or for the removal of contaminants. They may be of horizontal or vertical design. The reagent tube should be as small as possible consistent with efficient operation in order to minimize the 'dead volume' in the system.

* An exception to this rule is when very long high impedance gas transmission tubes are being used necessitating high input pressures. In this case one can safely obtain a satisfactory measure of flow control at high pressure by small adjustments of the regulator output pressure.

Horizontal furnaces have the advantage of uniform heating over the effective hot zone length. Some horizontal furnaces are split longitudinally with the two halves hinged; this simplifies reagent tube inspection and maintenance. However, unless the reagents are packed carefully, the gas may stream over the reagent and be processed inefficiently. Vertical furnaces have a greater temperature differential over the effective hot zone length (which can be minimized by asymmetrical winding of the element) but have excellent gas flow characteristics. Sizes range from 100 W to 3 kW with effective hot zone lengths of approximately 3 cm to 30 cm respectively. The choice of reagent tube dimensions is largely governed by the chemical reaction, the gas flow rate and the half-life of the desired product. The maximum temperature used is usually about 900 °C. Heating elements should therefore be suitable for continuous operation at this temperature.

Temperature Measurement and Control

Either thermocouples or resistance thermometers may be used for furnace temperature measurement. Noble or base metal thermocouples may be used for the temperature range in which we are interested. Whichever type is used it is essential that the correct type of compensating leads are used and that the cold junction is maintained at a stable temperature. Temperature indication may be by a simple pyrometer indicator or by an indicating temperature controller.

Methods of furnace temperature control include energy regulators, solid state controllers and indicating controllers. The energy regulator operates by interrupting the furnace supply current using a heated bi-metal strip, at definite intervals with a variable on/off ratio. It should be noted that this type of regulator does not sense the furnace temperature; its failure may therefore result in an excessive temperature rise. The energy regulator may be roughly calibrated for a given furnace; a more satisfactory arrangement is to use a thermocouple and a temperature controller as described below.

The solid state temperature controller uses the amplified output of either a thermocouple or resistance thermometer to control the furnace element current with a bi-directional silicon controlled rectifier. The power delivered is always proportional to the difference between the set temperature and the measured temperature. Temperature indication is given by the control setting and output power indication may also be included. A typical temperature range for this type of instrument is 100–1000 °C. A more sophisticated type

of solid state temperature controller uses cycle selection in which the supply current is switched on for trains of complete cycles, the switching always taking place at zero voltage. This causes minimal injection of radio frequency interference into the mains supply, a feature which is very desirable, especially if sensitive electronic apparatus is in use in the same locality. Solid state temperature controllers may be fitted with thermocouple break protection which automatically switches off the furnace in the event of thermocouple failure.

The indicating controller is basically a high grade millivoltmeter which is connected to a thermocouple, and incorporates an optically activated servo mechanism which controls the power supply to the furnace element. The temperature setting control adjusts the position of the optical path with respect to the scale, the path being interrupted only when the millivoltmeter pointer indicates the set temperature. Indicating controllers may also be fitted with thermocouple break protection.

Reagent Tubes and Reagents

Reagent tubes used in furnaces may be of glass, silica or stainless steel, depending upon the conditions under which they are required to operate. Borosilicate glass is satisfactory for temperatures up to ~ 450 °C and has the advantages of being cheap and easy to work with. It is of particular value for supporting reagents which react with silica, for example, zinc. Silica (preferably transparent rather than translucent) is useful for temperatures up to ~ 1000 °C. Tubes made of this material tend to be chemically attacked by some reagents (e.g. zinc and CuO) but can nevertheless have a useful life. When high temperatures (up to ~ 1000 °C) and pressures are necessary, or when the reagent is very reactive towards other materials, a heat resistant high temperature nickel alloy* or austenitic chromium nickel stainless steel may be used[13].

Connections to furnace reagent tubes may be made as shown in *Figure 3.5* (*a*). When glass or silica is used the connectors are cemented directly onto the ends of the tube using a suitable heat resistant adhesive such as Araldite.† When a stainless steel or nickel alloy tube is used, compression fittings are satisfactory.

The cooling of reagent tube connections can be a problem. Radiant heat can be minimized by the use of multiple heat reflectors. Three

* Nimonic alloy 75 supplied by Henry Wiggin and Co. Ltd, Hereford HR4 9SL, England.

† Supplied by Ciba-Geigy (U.K.), Plastics Division, Duxford, Cambridge, England.

polished reflectors can reduce the radiant heat to a fraction of its incident value (*Figure 3.5* (*b*)). Little can be done about heat transmitted to the tube connections by the light pipe effect in glass or

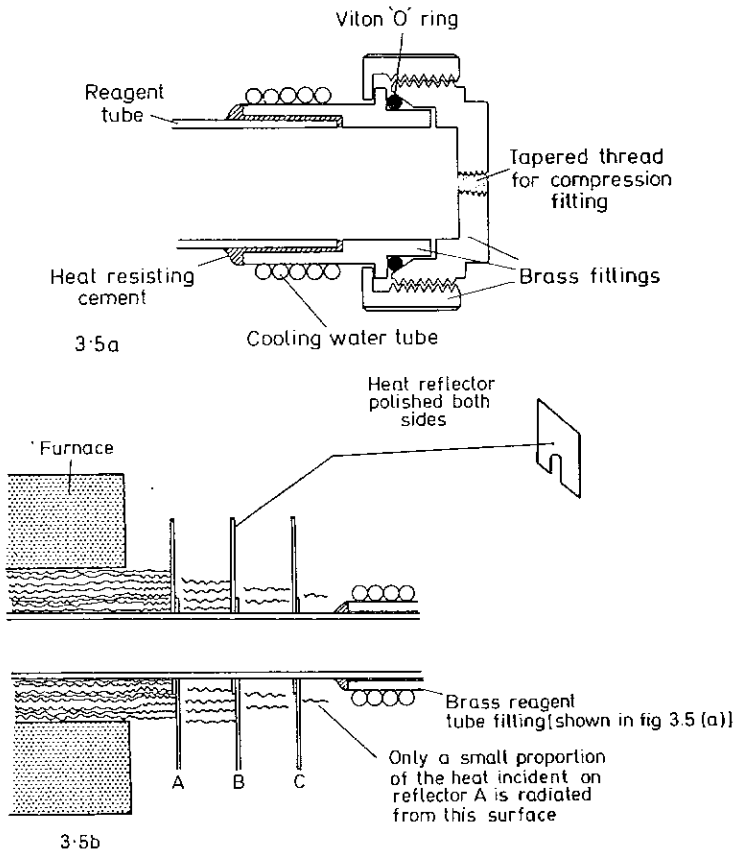

Figure 3.5 Cooled connection to a furnace reagent tube showing: (*a*) type of connection and method of water cooling; (*b*) the use of multiple heat reflectors

silica tube. In severe cases water cooling of connecting tubes and fittings may be necessary (*Figure 3.5* (*a*)).

Some common reagents used in radioactive gas processing furnaces are activated charcoal, graphite, copper oxide, copper, zinc and Hopcalite* (see Table 3.2). Care should be taken to ensure that

* A preparation containing about 60 per cent MnO_2 and 40 per cent CuO which is an almost specific catalyst for the oxidation of carbon monoxide. Supplied by Hopkin and Williams Ltd, Chadwell Heath, Essex, England.

the reagent is confined to the hot zone of the furnace tube, silica wool (for silica tubes) and glass sinters (for glass tubes) being useful retaining materials. This is particularly necessary when undesired chemical reactions are possible in the cooler parts of the reagent tube.

Some reagents may be generated *in situ*. An example is copper oxide which after reduction may be re-oxidized (section 6.3.2, page 204). This cannot necessarily be done indefinitely, however, since after repeated oxidation and reduction the reagent may sinter and thus become reduced in effective area. This reduces its reaction capacity and also allows streaming of the gas, usually resulting in unreacted contaminants appearing at the furnace output.

When zinc powder is used as a reagent it is necessary to use a glass tube and maintain its temperature at 390 ± 10°C to avoid melting the zinc (see section 7.3.1, page 229). It is also necessary to retain this material with a glass sinter positioned downstream from the zinc column.

The pressure differential across a reagent tube clearly depends to some extent upon how finely divided the reagent is, and how tightly it is packed. Substances such as copper turnings or activated charcoal (10–50 mesh) usually produce a negligible pressure drop, whilst zinc powder can present quite a high impedance to the gas flow. Hence, care is sometimes necessary to avoid a build-up of dangerous pressures.

Before activated charcoal is used as a reagent it should be heated to ~ 200°C under a gentle flow of nitrogen to release trapped water vapour and volatile organic compounds which would otherwise contaminate the system.

The determination of the volume necessary for a particular furnace reagent is usually a matter for experiment. In general it is desirable to use minimal volumes both for reagents and the tubes in which they are supported. Quite apart from lessening the radiation hazard and hence the amount of necessary shielding, this results in a minimal loss of activity by decay in transit and by undesired retention of the product in the reagent itself. The volumes of reagents and reagent tubes given in the production systems in chapters 5–8 are the maximum which should be used.

Some reagents at elevated temperatures will unexpectedly retain certain products. For instance, ^{15}O has been shown to be retained by hot copper oxide[11]. Thus, before a furnace reagent is used in a radioactive gas processing system it is advisable to investigate thoroughly its properties under all anticipated operating conditions. To prevent premature exhaustion and possible 'breakthrough' it is

necessary to change regularly or recondition reagents subsequently incorporated into such systems.

3.5.2 Absorbers

Processing is often possible using reagents at ambient temperature. These we call absorbers. Typical materials include soda lime, activated charcoal, manganese dioxide, calcium chloride, magnesium perchlorate, copper and occasionally, silica gel (see Table 3.2).

The usual method of containing absorbers is to use an acrylic* tube with integral filters and detachable ends as shown in *Figure 3.6*. Alternatively, glass tubes may be used with integral screwed fittings.†

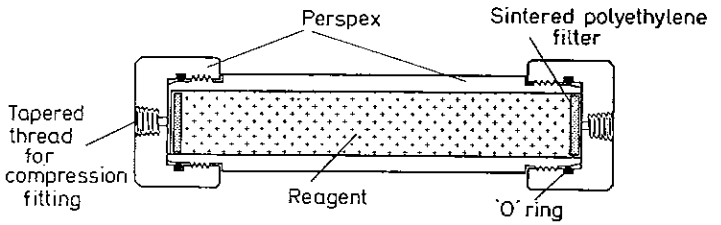

Figure 3.6 Absorber container for use with reagents at ambient temperature

When high pressures are likely a metal tube should be used. In this case consideration should be given to the possible reactivity of the metal towards the gas being processed. A useful material is stainless steel.

Filters made from sintered polyethylene‡ are satisfactory in most cases; an alternative is glass fibre filter paper supported on sintered polyethylene.

Some absorbing reagents are self indicating, for example, soda lime and silica gel, the latter also being capable of regeneration.

As with reagents used at elevated temperatures, minimum volumes both for absorbers and their supporting tubes are desirable to avoid unnecessary losses, radiation hazards and shielding. Optimum volumes are best determined experimentally. When 'carrier free' gases are being processed it is often possible to use quite small volumes of absorbing material. The volumes given in the production systems in chapters 5–8 are the maximum which should be used.

* Polymethylmethacrylate: I.C.I. Perspex.
† Quickfit type SQ4: GS 6/24, Jobling Laboratory Division, Stone, Staffordshire, England.
‡ Fison Scientific Apparatus, Loughborough, Leicestershire, England.

Some absorbing reagents will retain gases in trace amounts. For instance, silica gel has been shown to readily absorb trace ^{11}CO. Similarly certain reagents will retain products at ambient temperatures, but not at elevated temperatures. An example is Hopcalite which retains $^{11}CO_2$ at 25°C but completely liberates it at 650°C[11]. Thus before a given absorber is used in a radioactive gas processing system it is desirable thoroughly to investigate its properties under all anticipated operating conditions. To prevent premature exhaustion and possible 'breakthrough' it is advisable to change regularly absorbers subsequently incorporated into such systems.

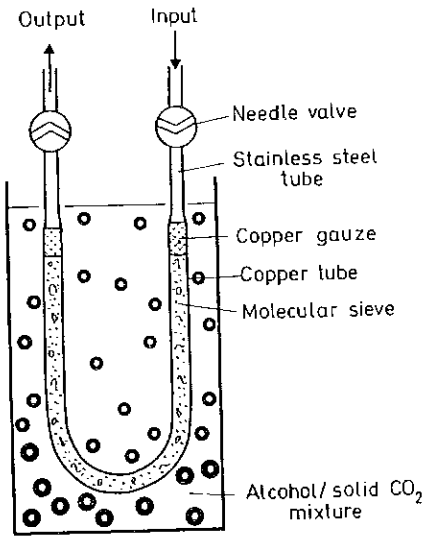

Figure 3.7 Typical 'U' tube molecular sieve trap

3.5.3 Cold Traps

Cold traps are sometimes used for removing unwanted contaminants, or more frequently for radioactive gas sorption pumping and storage systems. They fall into two categories, namely, those which contain an adsorbing medium and those which do not. The low temperature is obtained by the use of a freezing mixture or a liquefied gas.

Typical adsorption materials are molecular sieve and activated charcoal which may be retained in a copper 'U' tube as shown in *Figure 3.7*. Because of its low thermal conductivity, stainless steel tube is used between the copper and the trap input and output

needle valves. To obtain maximum trapping efficiency the adsorbing medium may need conditioning before use (see section 7.6, page 248).

An alternative form of cold trap is a spiral of copper (or glass) tubing (*Figure 7.20*). In this case the gas is frozen onto the wall of the tube.

Where a cold trap is to be used for the continuous removal of contaminants, no high pressures are usually involved. However, if the trap is to be used as a sorption pump or storage system it may have to withstand pressures up to 140 kg cm^{-2} (2000 lb in^{-2}) or more, and should therefore be designed accordingly (see sections 3.11.4, page 102 and 8.3.3, page 275).

In use the trap is placed in a vacuum flask containing a mixture of solid CO_2 and industrial methylated spirit (−72°C), or liquid nitrogen (−196°C). Temperatures other than these are possible with different freezing mixtures[9]. However, for safety reasons, it is desirable to use a liquid which has as high a flash point as possible and *never* to use liquid air or liquid oxygen (see section 9.3.3, page 318).

Unless a cold trap is designed specifically for the removal of water, care should be taken to ensure that gases passing through cold traps are dry, otherwise ice may be formed which may block the trap, possibly with unfortunate results! If it is necessary to remove a trapped product the trap may be heated using warm air or water, care being taken to avoid excessive heating of traps containing adsorbing materials.

The construction, preparation and use of some typical sorption pumps and storage systems is fully discussed in sections 3.11.4 (page 102), 7.6 (page 246) and 8.3.3 (page 273).

3.6 RADIOACTIVE CONCENTRATION AND SPECIFIC ACTIVITY

There are two terms in common use by which the amount of radioactivity present in a given volume may be expressed. These are the *radioactive concentration* and the *specific activity* of the chemical form in which the radionuclide is incorporated.

Radioactive concentration may be defined as the ratio of the radioactive content of a sample to its volume, under stated conditions of temperature and pressure. A convenient unit is mCi ml^{-1}.

Specific activity may be expressed as the ratio of the disintegration rate of radionuclei of a particular chemical form of an element, to the total number of inactive molecules present of the same chemical form. It is more conveniently given as the activity per millimole of

the chemical form concerned. For radioactive gases a convenient unit is mCi mM^{-1}.

In general, radioactive gases of high specific activity are desirable for clinical studies, especially where toxic gases are being used or where biological fluids are to be labelled, for example, blood. An example is given below of the determination of the specific activity of a radioactive gas.

Example

A 200 ml vessel contains a $^{15}O_2$ labelled mixture of 4 per cent O_2 in N_2. The pressure and temperature of the gas is 800 mm Hg and 22°C respectively. If the activity is 5 mCi at time t_0, calculate the specific activity of $^{15}O_2$ at t_0.

Solution

From the combined gas laws

$$\frac{P_1V_1}{T_1} = \frac{P_2V_2}{T_2}$$

$$V_2 = \frac{P_1V_1T_2}{P_2T_1}$$

Let $P_1 = 800$ mm Hg
$V_1 = 200$ ml
$T_1 = 22°C = 295°K$

At standard conditions:

$P_2 = 760$ mm Hg
$V_2 =$ unknown volume of gas
$T_2 = 0°C = 273°K$

$$\therefore \quad V_2 = \frac{800 \times 200 \times 273}{760 \times 295} = 194.8 \text{ ml}$$

$$\therefore \quad \text{Volume of } O_2 \text{ in vessel} = \frac{194.8 \times 4}{100} = 7.792 \text{ ml}$$

At standard conditions 1 gram mole = 22.4 l

$$\text{Thus 7.792 ml contains } \frac{7.792}{22.4 \times 10^3} M = 0.3479 \times 10^{-3} \text{ M}$$

$$= 0.3479 \text{ mM } O_2$$

$$\therefore \quad \text{Specific activity of } ^{15}O_2 \text{ at } t_0 = \frac{5}{0.3479} \text{ mCi mM}^{-1}$$

$$= 14.37 \text{ mCi mM}^{-1}$$

3.7 YIELD MEASUREMENT

3.7.1 Yield Measurement during Bombardment (Continuous Yield Measurement)

The yield may be observed during bombardment by passing the radioactive gas continuously through a fixed volume where its activity is detected. It will be noted that, in general, two types of gas flow vessel are used, namely, a spiral and a cylinder. The spiral is

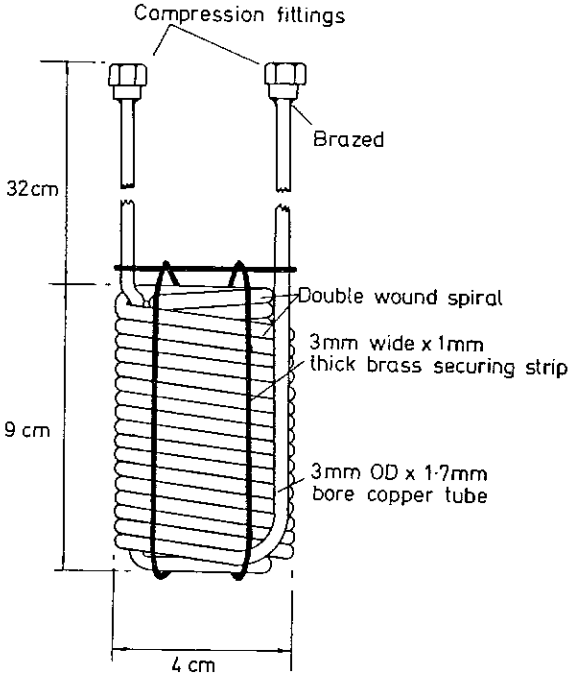

Figure 3.8 Yield measuring spiral

used when a *quantitative* estimate of the radioactive concentration is required, the cylinder being used when a *qualitative* indication is sufficient.

Measuring Systems Using Spirals

A typical spiral is shown in *Figure 3.8*. Double wound from 3 mm O.D. × 1.7 mm bore copper tubing and having a total volume of ~ 10 ml, it has dimensions suitable for its use in a high pressure ionization chamber of the type shown in *Figure 3.14*.

Since a given bolus of radioactive gas does not radically change its dimensions as it passes through the spiral, the gas transit time is approximately V/F, where V is the volume of the spiral and F is the flow rate. Moreover, provided that the gas is not significantly compressed (i.e. the spiral is at the low pressure end of an open circuit gas flow system) this relationship holds for a range of flow rates. Thus, if the detector is calibrated, the radioactive concentration (mCi ml^{-1}) of the gas passing through the spiral may be continuously observed. Also, since the flow rate (ml s^{-1}) is known, the recovery rate (mCi s^{-1}) can also be continuously observed (mCi ml^{-1} × ml s^{-1} = mCi s^{-1}). If the transit time V/F through the spiral is small compared with the half-life of the radionuclide, it may be ignored. When the transit time is significant the decay during transit must be allowed for. However it is worth noting that the decay during transit of $^{15}O_2$ flowing at 2 ml s^{-1} through a 10 ml spiral is less than 4 per cent.

Ideally, measuring spirals should have the following characteristics:

(*a*) A volume small enough to cause insignificant decay of the gas during transit.

(*b*) Be constructed of tubing having a bore similar to that of the gas transmission tubes in the system.

(*c*) Have a low impedance to the gas flow.

(*d*) Have dimensions which will not cause significant geometry errors when used with a given ionization chamber or other detector.

(*e*) Be made of a material which will not significantly attenuate the radiation being measured or cause adsorption of the labelled gas molecules at room temperature.

Clearly it is difficult to fulfil all these conditions in practice, but these are the lines upon which an effective measuring spiral should be designed.

Materials which have been used for measuring spirals include stainless steel, copper, nylon, glass and PTFE.

Since, because of the limited volume, the amount of activity in a spiral is usually low, the use of a sensitive detector is almost a necessity. Consequently high pressure rather than atmospheric pressure ionization chambers are used with spirals, except when gases of high radioactive concentration are to be measured.

'On Flow' Yield Measurement of Mixtures Containing Positron Emitters

It is often necessary to estimate the yield of a radionuclide in the presence of other radionuclides. If all the nuclides decay by positron

emission, for example, ^{15}O, ^{13}N and ^{11}C, the ionization chamber reading may be apportioned by using the ratios of the various nuclides obtained by either decay curve analysis of the spiral contents, or radio-gas chromatographic analysis of a sample taken from the spiral output on flow (see section 3.2.3, page 50).

Measuring Systems Using Cylinders

A typical cylinder is shown in *Figure 3.9*. Made of 1.5 mm thick copper or brass, cylinders may be of any volume up to 200 ml. Their

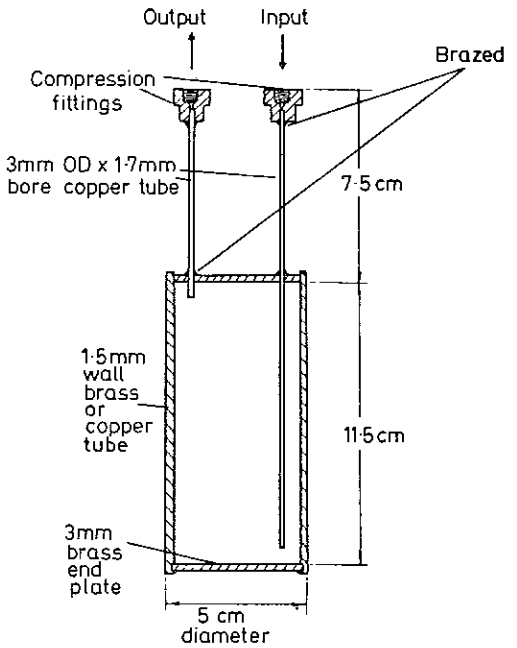

Figure 3.9 Sectional view of a yield measuring cylinder

dimensions are relatively unimportant and may be varied to suit the ionization chamber or other measuring device with which they are to be used. The cylinder shown in *Figure 3.9* has a volume of 200 ml and was designed to fit into an atmospheric pressure re-entrant ionization chamber of the type shown in *Figure 3.12*.

Because of its larger volume a cylinder contains more activity than a spiral and it may therefore be used with a less sensitive detector such as the atmospheric pressure ionization chamber. However, the transit time of a bolus of gas is long, often being comparable

with the half-life of the product nuclei being measured. Thus when a cylinder is used as the active volume in a gas flow yield measuring system, it should be regarded as a *monitor* only, and a necessary volume where the gas will decay during transit. The transit time is *not* V/F, but will deviate widely from V/F making direct quantitative measurements impossible. However, should it be required, the relationship between the ionization chamber response and the radioactive concentration of the gas at the cylinder input may be obtained for a given cylinder pressure and flow rate. This is done by taking a known small volume (1–2 ml at atmospheric pressure) of gas from the cylinder input and measuring its absolute activity with a calibrated detector (see section 8.3.5, page 277). Thus it is possible to determine the production rate (mCi s^{-1}) at the cylinder input. Furthermore, as the dispensed samples are always taken after the cylinder and are measured in a separate ionization chamber, the radioactive concentration (mCi ml^{-1}) of the gas may be obtained at the cylinder output. Thus the input measurement relates to target yield (processed), the output measurement relates to dispensed activity, and the cylinder ionization chamber reading gives a qualitative indication of the activity being produced.

Measuring cylinders should ideally have the following characteristics:

(*a*) A volume which is not so large as to cause a large amount of activity to be lost by decay during transit at the flow rate of interest.

(*b*) Input and output ports positioned as far apart as possible.

(*c*) Be made of a material which will not significantly attenuate the radiation being measured or cause adsorption of the labelled gas molecules at room temperature.

Since cylinders are not used for absolute activity measurements, geometry errors are of little importance and one may obtain maximum sensitivity by allowing the cylinder to completely fill the re-entrant volume of the ionization chamber.

Other Systems of Continuous Yield Measurement

Having established the principles of quantitative and qualitative continuous yield measurement, other systems can be envisaged. A highly sensitive qualitative detector is shown schematically in *Figure 3.10*[16]. In this the gas is passed through a cylindrical volume which is in contact with a β sensitive plastic scintillator (Type NE 102)* and a photomultiplier tube. By using a 'gas splitting' arrangement as shown in *Figure 3.11*, the response may be adjusted.

* Supplied by Nuclear Enterprises Ltd, Edinburgh, Scotland.

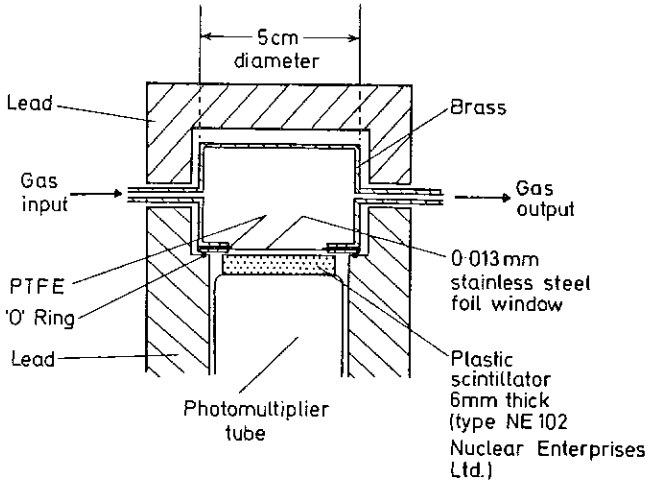

Figure 3.10 Sensitive thin window detector using a cylindrical gas volume and plastic scintillator

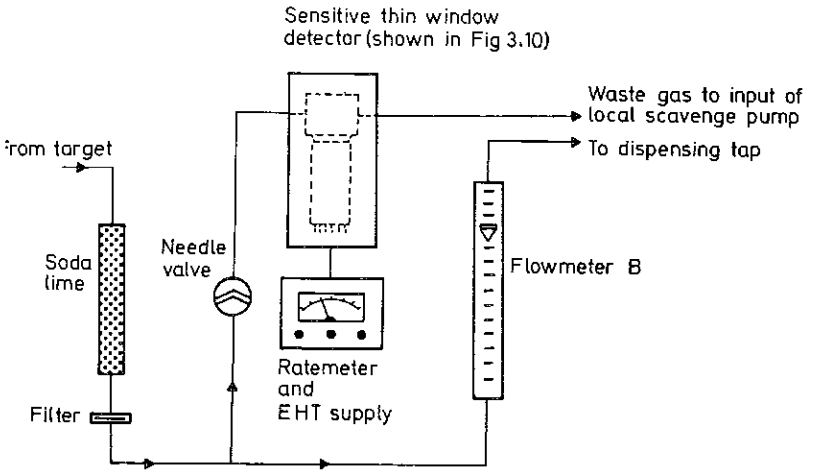

Figure 3.11 Use of 'gas splitting' to vary the response of the thin window plastic scintillation detector shown in *Figure 3.10*. A small proportion of the radioactive gas to be measured is directed to the detector through the needle valve. By adjustment of the needle valve the response of the detector may be varied

Similar systems, which can be quantitative and extremely sensitive, use a spiral of β sensitive plastic scintillator tubing* through which the radioactive gas is passed. (Plastic scintillators have a low sensitivity to γ-rays which can be advantageous in the detection of β emitting nuclides in the presence of high gamma backgrounds.)

Qualitative gas flow detectors may be calibrated at a given pressure and flow rate by passing a gas of known radioactive concentration through the detector, or by taking a small sample of known volume from the detector input and measuring it in a calibrated detector system.

3.7.2 Yield Measurement following Bombardment (Batch-wise Measurement)

When a product is known to contain only radionuclides emitting annihilation radiation a calibrated ionization chamber is the most convenient detector for measuring large batches. Such measurements are made in conjunction with data for the ratios of radionuclidic content obtained either by decay curve analysis or by gas chromatographic analysis (see section 3.2.3, page 50). However, if the product is known or suspected to consist of a mixture of radionuclides that emit a variety of γ-ray energies, a more sophisticated approach is necessary making use of a calibrated gamma ray spectrometer (see section 8.3.5, page 277).

3.7.3 Ionization Chambers

The Atmospheric Pressure Re-entrant Ionization Chamber

Of the various kinds of ionization chamber in general use, the atmospheric pressure re-entrant type is probably the most popular. Several models are available; most are of the same basic design. Typical of these is that shown in *Figure 3.12*, which is currently manufactured commercially† to a specification drawn up in collaboration with the National Physical Laboratory Advisory Committee on Radioactivity Standards and the Atomic Energy Research Establishment, Harwell. It is commonly known as an NPL ionization chamber (Type 1383A) and we shall refer to it as such[7,8].

Although the NPL chamber has integral β and γ-ray chambers we are only concerned with the use of the latter. The re-entrant volume is 12.7 cm deep and 6.6 cm diameter. The response of the chamber to a 1 mg Ra source under scatter-free conditions and using standard geometry, is about 35×10^{-12} A with a polarizing voltage

* Supplied by Nuclear Enterprises Ltd, Edinburgh, Scotland.

† Rank Nucleonics and Controls, Welwyn Garden City, England.

of 100–300 V. Since the chamber is unsealed its sensitivity varies slightly with the local atmospheric pressure; it also varies with temperature. Thus regular calibration is necessary. Saturation within a few parts in a thousand is obtained with a polarizing voltage of 100 V when the ionization current is the order of 10^{-10} A. A polarizing voltage of 300 V produces saturation within 0.3 per cent for currents the order of 5×10^{-9} A. The polarizing voltage may be derived from either a mains operated d.c. power supply or from dry batteries. When the latter are used they should be changed at

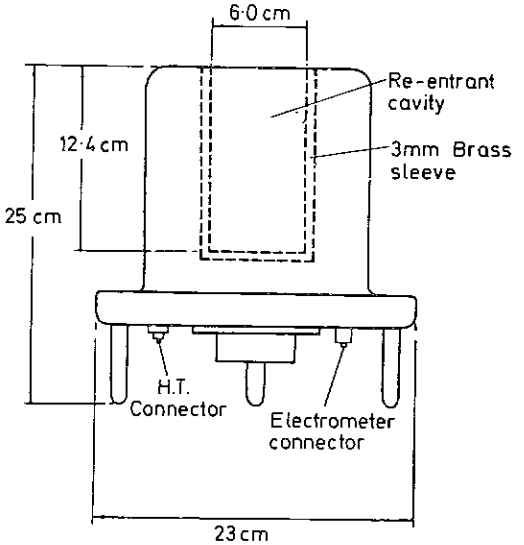

Figure 3.12 Atmospheric pressure (NPL) re-entrant ionization chamber

intervals equal to their shelf life to avoid spurious chamber output currents due to battery deterioration.

In order to ensure complete β particle absorption the re-entrant cavity is lined with a brass sleeve 3.2 mm thick. However, when using an NPL chamber for the measurement of low energy nuclides such as ^{133}Xe, serious errors can result due to absorption of the radiation in the brass sleeve and the walls of the re-entrant volume. For the accurate measurement of such nuclides a calibration should be carried out using a standard, the activity of which has been determined by an absolute counting technique.

The normal background current for an NPL ionization chamber is the order of 2×10^{-14} A. This is sometimes increased by the

proximity of activity in nearby gas processing equipment, and lead shielding cylinders or walls may be necessary to reduce the background to an acceptable level. However, the response of the chamber is slightly dependent upon its environment. Shielding by a lead cylinder 8 mm in thickness causes an increase of about 2 per cent in the γ-ray ionization current. A similar effect results from standing the chamber near other scattering surfaces such as lead walls.

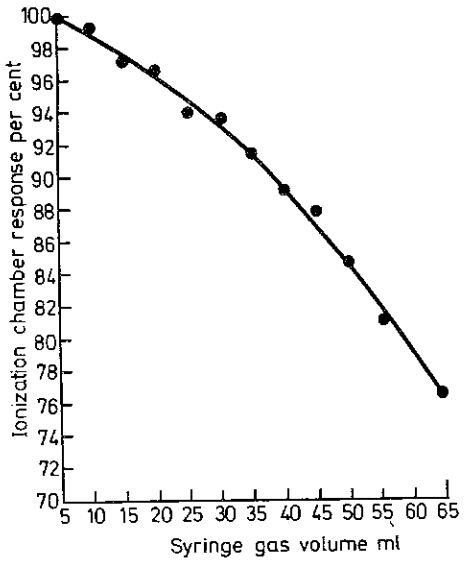

Figure 3.13 Typical geometry correction curve for an NPL ionization chamber used with a 50 ml syringe containing a gas phase positron source. A 5 ml sample of active gas in a 50 ml syringe produces a given ionization chamber response, arbitrarily 100 per cent. If the sample is increased in volume by dilution with inactive gas, the chamber response falls as shown until it is only ~ 76 per cent when the total gas volume is ~ 65 ml

The NPL chamber was designed primarily for the measurement of sources having a maximum volume of 5 ml held in a fixed geometry on the axis of the cylindrical re-entrant volume. Therefore, its use with extended sources can result in geometry errors. However, if only a relative indication of activity is required, NPL type chambers may be successfully used with an extended source of fixed geometry. Such an application is the use of a measuring cylinder for continuous yield measurement. Other applications include the measurement of gas samples in syringes. When a large volume (30 or 50 ml) syringe is used significant geometry errors can arise as the measured volume

of gas is increased. For a given size of syringe a correction curve may be plotted using increasing volumes of gas of known radioactive concentration (*Figure 3.13*).

In general, the NPL type ionization chamber is not suitable for use with measuring spirals unless gases of high radioactive concentration are to be measured (0.1 mCi ml^{-1}). An alternative is to use a high pressure ionization chamber.

The High Pressure Re-entrant Ionization Chamber

When the sensitivity of the atmospheric pressure ionization chamber is insufficient or its re-entrant volume of a shape which introduces geometry errors when used with extended sources, an alternative is the high pressure ionization chamber. This, as its name implies, operates at an elevated pressure which results in increased sensitivity.

High pressure type ionization chambers are commercially available with gas fillings which include air, argon and carbon dioxide. A typical example is the type IG12 ionization chamber* which is filled with argon to a pressure of 20 atmospheres (*Figure 3.14*).

Its sensitivity to γ-radiation of about 0.4 MeV to 1 MeV, is between 35 and 50 times that of an air-filled ionization chamber of the NPL type. The response of an IG12 chamber to a 1 mg Ra source is about 1100×10^{-12} A with a polarizing voltage of 600 V. This polarizing voltage is adequate for the measurement of up to about 50 mCi of 511 keV emitting nuclide. However, for greater saturation, a polarizing voltage of 1200 V should be used, thus allowing the accurate measurement of 511 keV activities up to 300 mCi. Since the chamber is sealed its sensitivity does not vary with the local atmospheric pressure or temperature. The polarizing voltage may be derived from either a mains operated d.c. power supply or from dry batteries. When the latter are used they should be changed at intervals equal to their shelf life to avoid spurious output currents due to battery deterioration.

Since high pressure ionization chambers are sensitive they invariably require good radiation shielding. The normal background current for the IG12 type is about 1.5×10^{-13} A measured with the chamber inside a lead shielding cylinder 4.5 cm thick.

An important feature of the IG12 type of ionization chamber is the deep re-entrant volume (32 cm × 5 cm diameter). This results in a response constant to within 1 per cent throughout almost 18 per cent of the depth of the re-entrant volume at a region near the bottom of the chamber (*Figure 3.15*). The wall of the re-entrant

* 20th Century Electronics Ltd, New Addington, Surrey, England.

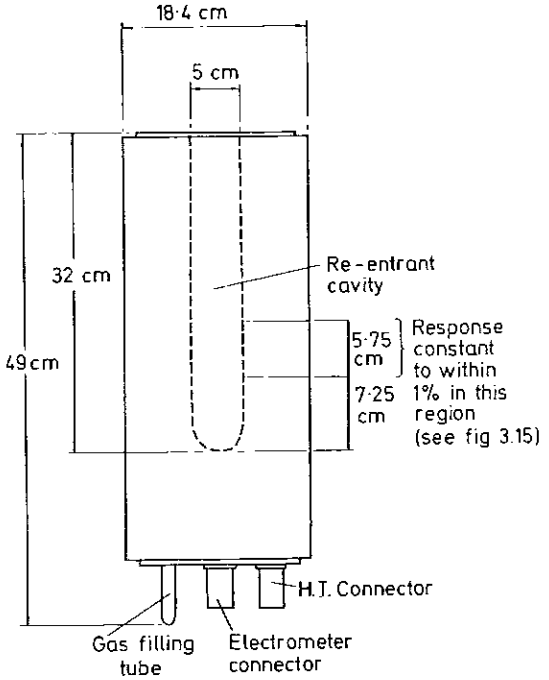

Figure 3.14 High pressure (IG 12) ionization chamber

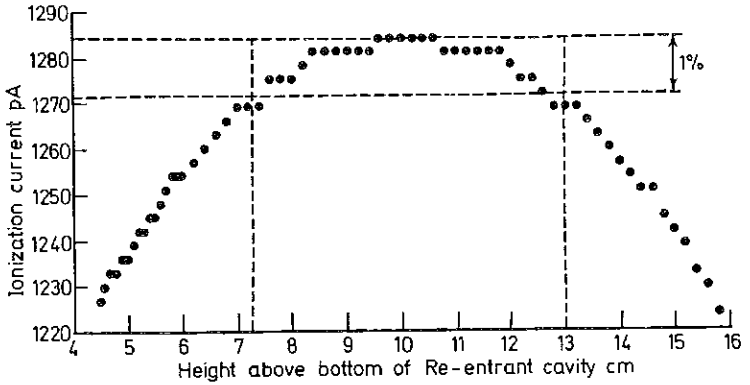

Figure 3.15 Typical depth response curve for an IG 12 high pressure ionization chamber. The curve shows the variation in ionization chamber response to a 1 mg Ra source as it is moved axially throughout the re-entrant volume. It will be seen that the response is constant to within 1 per cent over a 5.75 cm deep region near the bottom of the re-entrant cavity. (The measurement was made using a digital d.c. amplifier.) See also *Figure 3.14*

volume in the IG12 ionization chamber is made of 0.76 mm thick stainless steel. When using such a chamber a calibration should be carried out using a standard, the activity of which has been determined by an absolute counting technique.

The fact that the region of constant sensitivity is well inside the re-entrant volume allows small extended sources such as yield measuring spirals, cylinders and syringes to be measured under conditions free from significant geometry error.

In general the high pressure type of ionization chamber is to be preferred for use with systems producing short-lived radioactive gases. Provided a spiral is used at a pressure close to atmospheric, the radioactive concentration of the product may be continuously measured over a wide range of activity and flow rate. Moreover, the ability to measure directly the activity of a rapidly decaying gas sample without recourse to geometry correction curves is an advantage which needs no further emphasis.

3.7.4 Amplifiers

In general, two basic types of instrument are routinely used to measure ionization chamber currents. These are the direct current amplifier (d.c. amplifier) and the vibrating reed electrometer. Each has its relative merits and these we shall now consider in detail.

Direct Current Amplifiers

This type of instrument amplifies directly the voltage developed across a very high value resistance (typically 10^7 to 10^{13} ohms) through which the ionization chamber current flows. The amplifier uses a high degree of negative feedback resulting in the amplified output voltage being a direct measure of the ionization current. This voltage is amplified and displayed by an indicating meter calibrated in units of current. The feedback also effectively reduces the input capacitance thereby minimizing the time constant of the instrument.

The main advantage of the d.c. amplifier is its simplicity. However, such an instrument needs an electrometer valve at the input stage with a grid current of the order of 10^{-15} A, and has to be carefully designed to avoid long term zero drift. The maximum sensitivity is the order of 10^{-13} A. The capacity to ground at the input of a d.c. amplifier can modify its behaviour by increasing the time constant, and this limits the length of cable which may be used between the amplifier and the ionization chamber. Thus d.c. amplifiers are usually used close to the ionization chamber to which they are connected. Some d.c. amplifiers have provision for connection to a 1 mA or 100 mV chart recorder.

When using a d.c. amplifier for decay curve measurements of very short-lived radioactive gases such as $^{81}Kr^{m}$ and $^{15}O_2$, it is important to ensure that the time constant of the instrument *and* of any chart recorder used, is not so long as to influence the measurement. The same applies to the measurement of any other rapidly changing activity, one example being $^{13}N_2$ solution washout curves (section 6.3.2). This is particularly necessary when small amounts of activity are involved since the most sensitive ranges usually have the longest time constants. Some d.c. amplifiers have a preset control which varies the time constant on the more sensitive ranges.

Vibrating Reed Electrometers

The inherent problems of zero drift and instability associated with d.c. amplifiers are overcome in the vibrating reed electrometer, sometimes known as the vibrating capacitance electrometer. This is a null seeking instrument which works on the following principle.

The d.c. ionization current is passed through a high value resistor ($R = 10^9$–10^{12} Ω as in the d.c. amplifier) producing a d.c. voltage across it. This voltage is balanced by an electronic servo system, any error signal due to a change in ionization current producing a charge on a small constantly varying capacitor using a vibrating reed as one electrode. The a.c. component of the resulting error voltage is amplified by a narrow band a.c. amplifier. The output from the amplifier is passed to a phase sensitive rectifier and indicating meter. Since a.c. amplification is used zero drift is largely eliminated, and the sensitivity can be as much as 100 times that of a d.c. amplifier, making the measurement of currents the order of 10^{-15} A quite feasible. The output indicators of vibrating reed electrometers are usually calibrated in millivolts V (hence $I = V/R$), provision usually being made for connection to an external chart recorder.

The input resistors and vibrating reed system together with a pre-amplifier, are usually housed in a head unit which may be separated from the amplifier/indicator unit by 50 m or more of connecting cable.

The feedback arrangements used in vibrating reed electrometers do not usually result in a reduction of input capacitance as in the case of d.c. amplifiers. Hence the time constants and thus the speed of response of vibrating reed electrometers tend to be longer than those associated with d.c. amplifiers, making the precautions outlined earlier in this section even more applicable.

Although having the advantages of low zero drift and high sensitivity, the vibrating reed electrometer is inherently more complex than the d.c. amplifier, making it more expensive and potentially

less reliable. It is the authors' experience that unless very high sensitivity is required, a good d.c. amplifier is generally to be preferred.

3.7.5 Isotope Assay Calibrators

A device which is now becoming generally available is the 'isotope assay calibrator'. This consists of a d.c. amplifier or electrometer and an ionization chamber in an integral unit (which in some cases can be separated). The radioactive concentration of samples is directly displayed by a digital readout, usually in millicuries per millilitre. This is made possible by an 'isotope factor' control which may be set according to the specific gamma ray emission of the nuclide being measured. A wide range of sample volume may also be accepted without loss of accuracy.

Since these instruments are not normally calibrated for the radionuclides with which we are concerned, it is essential that before use they are calibrated using an absolute calibration method (see sections 3.2.3, page 54 and 8.3.4, page 276).

3.8 THE REMOTE CONTROL OF EQUIPMENT

Since radioactive gas processing equipment has to be shielded in either a separate processing room or lead enclosure, remote control may become necessary.

Some radioactive gas processing systems are remotely controlled from the clinical investigation room enabling any one of a number of radioactive gases to be selected. This is done by actuating solenoid operated gas flow valves placed at strategic points throughout the system. Either 'ganged' or 'free' switching may be used. In the former, pre-selected arrays of solenoid valves are actuated from a single switch; in the latter, individual valves may be operated from switches on a mimic gas flow diagram. Maximum versatility is obtained by combining both 'ganged' and 'free' switching in a given system. Test measurements (using a radio-gas chromatograph) should always be made to determine the time delay for a given gas change to become complete.

The solenoid valves should have seals and seatings which are unaffected by any of the gases encountered during processing. Neoprene is decomposed by ozone; alternatives are PVC and PTFE. (For specific applications the reader is advised to refer to the manufacturer's data.)

All electrically operated remotely controlled equipment should be

designed so that it is 'fail safe'. In the event of a solenoid valve power supply failure the valves should automatically revert to a condition preventing any escape of radioactive gas. For maximum safety, solenoid valves should not be incorporated into systems using hydrogen.

Indication of valve actuation is necessary and is easily obtained by using solenoid valves incorporating reed switches operated by the change in magnetic flux when the plungers move.* Simple unregulated power supplies are sufficient for solenoid valve operation.

When the complexity of electro-mechanical remote control systems is not justified, simple remote control of taps and valves can be obtained by the use of extension rods and handles protruding through a lead wall. In general, electro-mechanical gas flow control is preferable in complex custom built systems having a distant processing room; simple mechanical remote control is adequate for small processing systems situated in a lead enclosure.

When a radioactive gas processing system is used routinely it may be advantageous to use a time switch to control any furnaces in the system, care being taken to incorporate a mains relay if the furnace load current exceeds that which the time switch can safely carry.

3.9 WASTE GAS DISPOSAL

Since most of the radioactive gases with which we are concerned are of low radioactive toxicity, their disposal to waste does not present a serious problem. A satisfactory method is to discharge the gas into the atmosphere from a chimney having a height in excess of 30 m. An alternative is to discharge the effluent gas from a vent preferably well above roof level and sited so as to avoid any risk of down draughts carrying the discharged gas through open windows or room ventilation air intakes.

Whichever system is used it is essential that the waste pipe is routed well away from laboratories containing radiation detection equipment. The main waste pipe should be large enough for it to be maintained at all times at a slight vacuum by a main scavenge pump as shown in *Figure 3.16*, and be capable of coping with the maximum flow rate of waste gas ever likely to be encountered (see also sections 3.3, page 57 and 9.2.3, page 315).

It is desirable that the main scavenge pump has a pumping speed of about 100 times the sweep gas flow rate used for any system.

* Dewrance Controls Ltd, Skelmersdale, Lancashire, England, and Automatic Switch Co., Florham Park, New Jersey 07932, U.S.A.

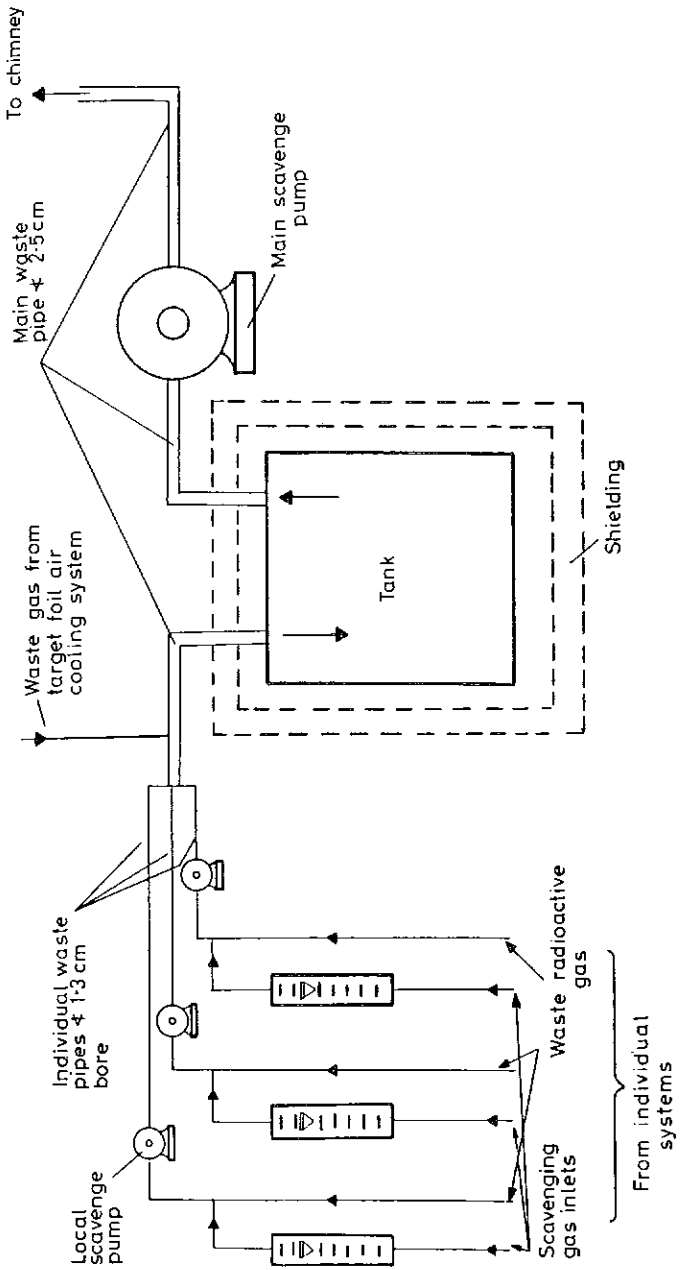

Figure 3.16 Waste gas disposal system. The main scavenge pump maintains the shielded tank at a slight vacuum, thus providing a vacuum reservoir which copes with any sudden influx of gas from the radioactive gas systems or the target foil air cooling system

Since the maximum sweep gas flow rate with which we are concerned is ~ 8.3 ml s^{-1} (^{15}O production systems, chapter 5), a suitable main scavenge pump flow rate is 50 l min^{-1} (1.77 ft^3 min^{-1}). As a precautionary measure each system is provided with a smaller scavenge pump capable of coping with the maximum sweep gas flow rate from that system (*Figure 3.16*). High quality oil-free diaphragm pumps are suitable for both main and local scavenge pumps (see section 3.11.3, page 98).

TABLE 3.5

SWEEP AND SWEEP/TARGET GASES USED IN RADIOACTIVE GAS PRODUCTION SYSTEMS

Sweep or sweep/target gas	*Production system*	*Reference*	
		Section	*Page*
4% O_2 in N_2	^{15}OO	5.4.1	136
2.5% CO_2 in N_2	$C^{15}OO$	5.4.2	140
2% O_2 in N_2	$C^{15}O$	5.4.3	145
1–4% O_2 in N_2	$H_2{}^{15}O$	5.4.4	150
2–4% O_2 in N_2	^{15}OO (red cells)	5.4.5	157
CO_2	^{13}NN (solutions)	6.3.1	191
		6.3.2	200
He	^{13}NN (gas phase)	6.3.3	208
He	$^{11}CO_2$	7.4.2	241
He	$^{11}CO_2$ (stopped flow)	7.5.3	246
N_2	^{11}CO	7.3.1	227
H_2	^{11}CO	7.3.2	231
H_2	^{11}CO (stopped flow)	7.5.3	246
N_2 or 0.1% O_2 in N_2	$^{11}CO_2$	7.4.1	237
2% CO in He	^{11}CO (closed circuit)	7.5.2	244
Kr	$^{85}Kr^m$	8.3.2	272

3.10 SWEEP GASES AND GAS MIXING

A range of sweep gases commonly used for short-lived radioactive gas production is given in Table 3.5. It will be seen that some are mixtures (section 2.2.3, page 28). Sweep gases are commercially available compressed in cylinders, either as standard products or as special mixtures. Non-inflammable gases are supplied in cylinders with a right-hand screw connection, inflammable gases being in cylinders with a left-hand screw connection.

On some occasions it is more convenient to prepare one's own gas mixtures. This may be done either by compressing known volumes of gases in cylinders, or by the infusion of the second component into the sweep gas during its use. The latter method has

the advantage that it is possible to vary the percentage of added gas at any time. However, unless the amount of added gas is extremely small (< 0.1 per cent) it is generally preferable to prepare the gas mixtures in cylinders.

3.10.1 The Preparation of Gas Mixtures in Cylinders

Gas mixtures in excess of about 0.1 per cent can be prepared using the apparatus shown in *Figure 3.17*. Such a device should be constructed using only high grade components rated at pressures

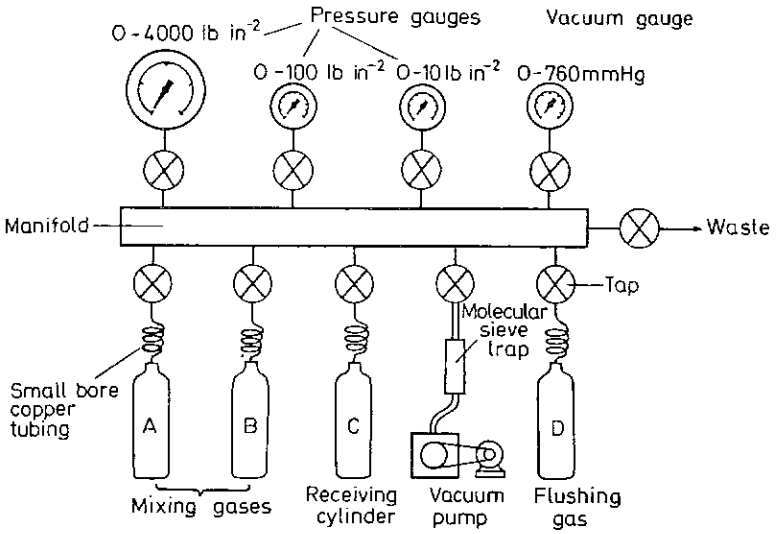

Figure 3.17 Apparatus for the preparation of gas mixtures in cylinders

in excess of the maximum working pressure. The vacuum pump can be any small rotary pump capable of a pumping speed of 50–150 l min^{-1}. Connections to the cylinders may be coiled lengths of annealed copper tube of 1–2 mm bore. The waste line should go to a fume cupboard and particular care should be used when mixing toxic or inflammable gases. Inflammable gases should *never* be mixed with oxygen, nitrous oxide, or other gases that support combustion. Great care should be taken when manipulating the taps on the mixing plant since the low pressure and vacuum gauges are very easily damaged by residual gases under pressure in the high pressure gauge. As with all pressurized gas equipment, under no circumstances should oil or grease be used.

In general it is not necessary to attempt a high degree of precision when gas mixing. Hence, only simple gas laws need to be used and in practice there is no need to allow for temperature effects. Gas mixtures prepared according to the following procedure have been shown to be reproducible by gas chromotographic analyses. In any case the accuracy of mixing is largely dependent on the accuracy of the gauges and the skill of the operator, but ± 10 per cent of the required value should be possible except in very dilute gas mixtures (< 1 per cent).

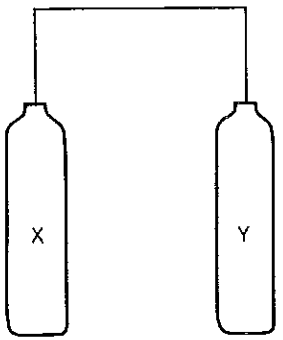

Figure 3.18 Basic gas mixing system

In any system of two connected cylinders X and Y (*Figure 3.18*) the pressure P in each cylinder after equalization is given by the following expression:

$$P = \frac{P_x V_x + P_y V_y}{V_x + V_y} \tag{3.1}$$

where V_x and V_y are the cylinder volumes or the gas volumes which the cylinders are capable of holding at the same pressure and temperature. (Gas cylinders are often marked with their rated capacities at a stated pressure.)

P_x is the pressure in X before equalization
P_y is the pressure in Y before equalization
(it is assumed that the temperature is constant)

As an example, assume that a mixture of 4 per cent O_2 and 96 per cent N_2 is to be prepared. (For convenience, imperial units have been used.)

Considering *Figure 3.17*, let the following conditions apply:

Let A be the N_2 cylinder. Rated capacity (V_A) 165 cu ft at 2000 lb in^{-2} (gauge)

Actual pressure in A, 1800 lb in^{-2} (absolute)
$\therefore\ V_A = 165$ and $P_A = 1800$
Let B be the O_2 cylinder.
Rated capacity (V_B) 44 cu ft at 2000 lb in^{-2} (gauge)
Actual pressure in B, 1200 lb in^{-2} (absolute)
$\therefore\ V_B = 44$ and $P_B = 1200$
Let C be the evacuated receiving cylinder.
Rated capacity (V_C) 110 cu ft at 2000 lb in^{-2} (gauge)
Actual pressure in C, 0 lb in^{-2} (absolute)
$\therefore\ V_C = 110$ and $P_C = O$

Using equation (3.1) determine the maximum attainable pressure P_C^A in C after equalization with the nitrogen cylinder A.

$$P_C^A = \frac{(P_A V_A + P_C V_C)}{(V_A + V_C)} \tag{3.2}$$

$$= \frac{(1800 \times 165) + (0 \times 110)}{(165 + 110)}$$

$$= 1080 \text{ lb in}^{-2} \text{ (absolute).}$$

Thus the oxygen pressure required in C for a 4 per cent mixture

$$= \frac{4 \times 1080}{100} = 43.2 \text{ lb in}^{-2} \text{ (absolute).}$$

Check if B is capable of supplying this amount of oxygen, assuming that the O_2 is introduced into C first, i.e. $P_C = O$ and P_C^B is the maximum attainable pressure in C after equalization with the oxygen cylinder B.

From equation (3.1):

$$P_C^B = \frac{(P_B V_B + P_C V_C)}{(V_B + V_C)}$$

$$= \frac{(1200 \times 44) + (0 \times 110)}{(44 + 110)}$$

$$= 343 \text{ lb in}^{-2} \text{ (absolute).}$$

(If this value were less than the required pressure, it would then be the limiting value and the nitrogen pressure for a 4 per cent mixture would have to be recalculated.)

Cylinder C may thus be filled with oxygen to 43.2 lb in^{-2} absolute from cylinder B. Assuming a standard atmospheric pressure of 14.7 lb in^{-2} the gauge pressure will be:

$$43.2 - 14.7 = 28.5 \text{ lb in}^{-2} \text{ (gauge).}$$

Finally, fill C with nitrogen to 1080 lb in^{-2} absolute, i.e. 1065 lb in^{-2} gauge, from cylinder A.

Note that the low percentage component is introduced into the receiving cylinder first since its pressure can then be accurately measured with the low pressure gauge. It may also be noted that once the low percentage component is introduced, the 'topping up' cylinder is then capable of exceeding the required pressure in the receiving cylinder. In the above example the maximum pressure possible in C would have been 1097 lb in^{-2} absolute. This may be calculated from equation (3.2), P_C being 43.2 lb in^{-2} absolute. The pressure remaining in any cylinder after mixing may be calculated from equation (3.1).

The procedure for mixing gases in cylinders is summarized as follows:

(*a*) Ascertain the ratings of all the cylinders to be used.

(*b*) Flush the gas mixing plant using the major component of the mixture to be prepared, or evacuate with the vacuum pump. (Care should be taken *at all times* not to deviate from the manufacturer's specifications for any gauge.)

(*c*) Evacuate the receiving cylinder, preferably after filling it with the major gas component and flushing to waste.

(*d*) Calculate the required pressures using equation (3.1).

(*e*) Introduce the low percentage component.

(*f*) Top up with the high percentage component.

(*g*) After filling, store the receiving cylinder horizontally at room temperature for 12 hours to ensure complete mixing.

(*h*) Check the gas composition with a gas chromatograph or mass spectrometer.

3.10.2 The Continuous Preparation of Gas Mixtures

Gas mixtures up to about 10 per cent concentration can be continuously produced using a small peristaltic pump to infuse the low percentage component as shown in *Figure 3.19*. For a given major component flow rate, the infused gas percentage may be varied by altering the pump speed, the gas supply pressure, or the peristaltic tube internal diameter. The pump in this case has an equilateral triangular rotor of 2.2 cm side operating at 5, 10 or 20 revolutions per minute. The infused gas flow rate may be measured 'off line' using a bubble flowmeter. Alternatively, a sensitive variable area flowmeter may be used 'on line', although the reading may fluctuate with the pump rotation.

The flexibility of this method of sweep gas preparation makes it ideal for experimental use, particularly when only trace quantities of added gas are required.

3.11 DESIGN, PREPARATION AND CONSTRUCTION TECHNIQUES FOR RADIOACTIVE GAS PROCESSING SYSTEMS

In this section we shall consider some of the practical aspects of the various techniques used in the construction and maintenance of typical radioactive gas systems. Many of the techniques necessary

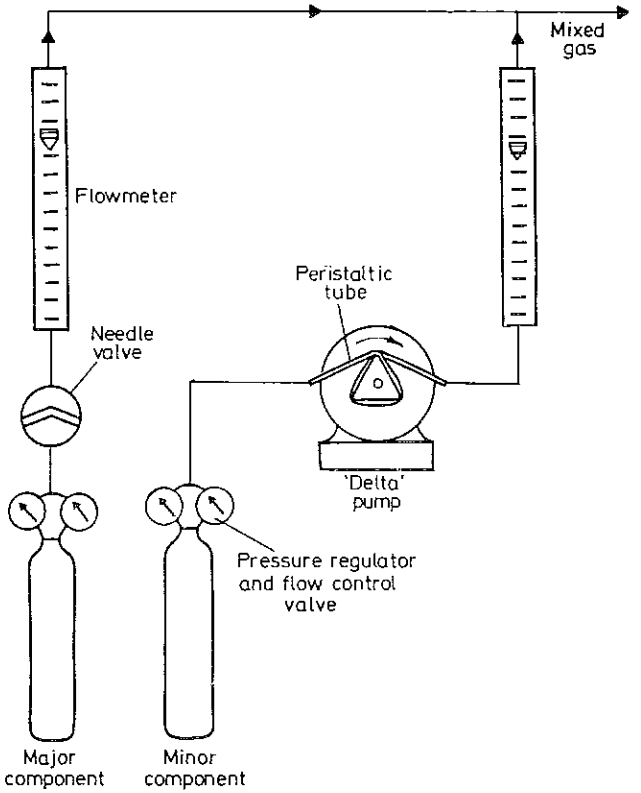

Figure 3.19 Apparatus for the continuous preparation of gas mixtures

for this work are standard engineering procedures and we shall assume that those who are prepared to construct their own processing systems will be familiar with them. A high standard of workmanship is necessary for both the efficient and safe operation of such systems.

3.11.1 Taps and Valves

The choice of a particular tap or valve is governed principally by the operational requirements such as the number of ways, operating pressure and temperature, and resistance to chemical attack and radiation damage. Table 3.6 lists some taps and valves together with some of their characteristics, which the authors have found to be satisfactory (see also sections 3.4.2, page 62 and 3.4.4, page 63).

Sometimes a commercially available tap can be modified to reduce its dead volume or provide an additional port. Such modifications are shown in *Figure 3.20.*

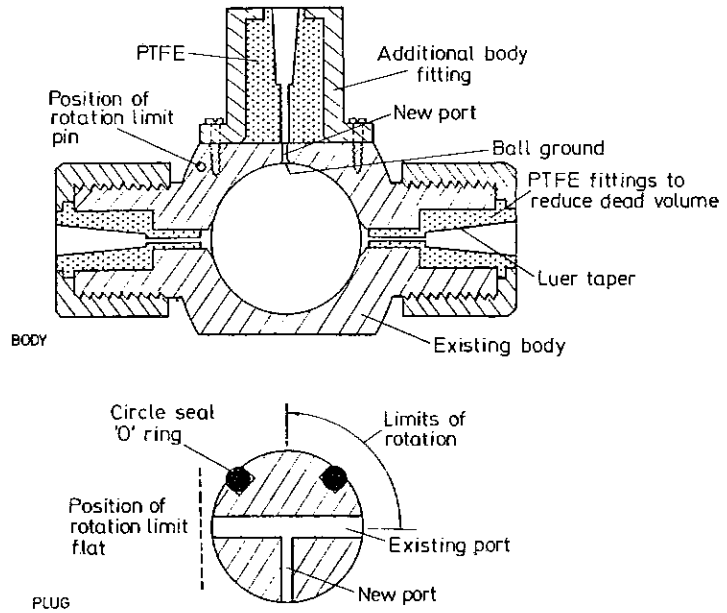

Figure 3.20 Modifications to a Circle Seal tap to reduce its dead volume and provide an additional port (see Table 3.6)

Where possible metal bodied rather than plastic taps and valves are to be preferred for permanent installation. Disposable plastic taps are invaluable for sterile assemblies (*Figures 5.15* and *6.13*) and similar applications; these may also be used semi-permanently for low pressure applications at ambient temperature.

3.11.2 Tubes and Connections

As has been discussed in section 3.3, small bore stainless steel,

TABLE 3.6

TAPS AND VALVES SUITABLE FOR USE IN RADIOACTIVE GAS SYSTEMS

Manufacturer	*Type*	*Port configuration*	*Possible port inter-connections*	*Material*			*Type of connection to tubes*	*Typical* operating pressure*		*Typical* operating temperature °C*	*Supplier*
				Body	*Plug*	*Seal*		*kg cm⁻²*	*lb in⁻²*		
Circle seal	Rotating plug with 'O' ring seal	A—O—B	A to B	Brass or stainless steel	Brass or stainless steel	Neoprene or viton	Screwed	2.1	30	100	Circle Seal Products Co. Inc., Circle Seal Center, PO. Box 3666, Anaheim, California 92803, U.S.A.
Vygon	Rotating plug	A—O—B	A to B	Nylon	Nylon	Nylon	Luer	2.1	30	40	Vygon Products, 5–11 Rue Adeline, 95 Ecouen, France
Hoke	Rotating ball	B—O—C A	A to B A to C	Brass or stainless steel	Stainless steel	PTFE	Screwed	2.1	30	100	Hoke International Ltd, 1 Tenakill Park, Cresskill, New Jersey, U.S.A.
Pharmaseal	Rotating plug	B—O—C A	A to B A to C B to C	Nylon	Nylon	Nylon	Luer	2.1	30	40	Pharmaseal Laboratories, Glendale, California 91201, U.S.A.
Chromatronix	Sliding plug	B—O—C A	A to B A to C	Delrin	Kel-F	PTFE	Screwed	2.1	30	40	Chromatronix Inc., 2743 Ninth Street, Berkeley, California 94710, U.S.A.
Baxter	Rotating plug	B—O—C A	A to B A to C B to C A to B to C	Poly-carbonate	Poly-ethylene	Poly-ethylene	Luer	2.1	30	40	Baxter Laboratories, Thetford, Norfolk, England
Hoke	Needle valve	A—⊗—B	A to B	Brass or stainless steel	Stainless steel	PTFE	Screwed	2.1	30	100	Hoke International Ltd, 1 Tenakill Park, Cresskill, New Jersey, U.S.A.
Edwards	Graduated needle valve	A—⊗—B	A to B	Brass	Brass	Neoprene	Screwed	2.1	30	30	Edwards High Vacuum Ltd, Crawley, Sussex, England
Rollason	Diaphragm valve with coarse tapered plug	A—⊗—B	A to B	Brass	Brass	Neoprene	Screwed	2.1	30	30	Rollason Engineering Ltd, Progress Way, Croydon, CR9 4PP Surrey, England

* For full range refer to manufacturers' data

nylon, copper or PTFE tube is suitable for most radioactive gas transmission systems. Various types of joint may be needed such as couplings for hand tightening and releasing, permanent installation or quick release connections.

Vacuum connectors with 'O' rings have proved very satisfactory for hand tightening and releasing. A simple and effective permanent

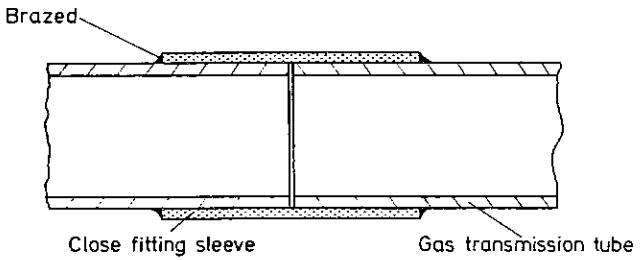

Figure 3.21 Method of joining metal gas transmission tubes using a close fitting sleeve and brazed joints

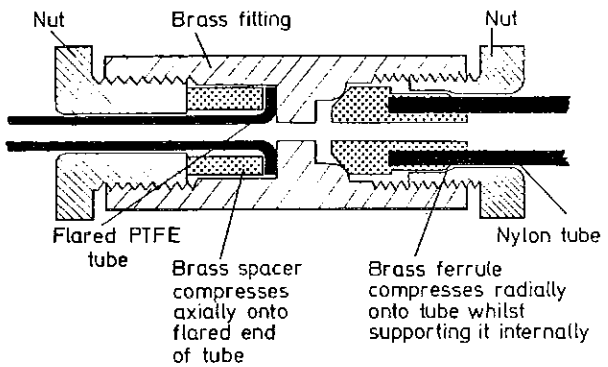

Figure 3.22 'PTFE to nylon' tube connector showing two types of compression fitting. The flared end of the PTFE tube is formed using the device shown in *Figure 3.23*. Note that the nylon compression fitting is of the type which supports the nylon tube internally at the point of compression (Nitex—see Table 3.7)

joint in metal tubes is to use a close fitting sleeve, preferably of the same material as the tubes to be joined, and braze the ends as shown in *Figure 3.21*. Care should be taken to avoid the ingress of flux; it is advisable to carry out a pressure and flow test immediately after making such a joint. The tube will be annealed during this brazing process and will therefore be weaker at the joint, necessitating careful subsequent handling, especially during installation.

Soft solder should *never* be used for making connections in radioactive gas systems since it is prone to fracture.

Both metal and plastic tube can be joined using compression fittings. Various types are commercially available. Care is necessary to use the correct size of tube when using compression fittings since quite close tolerances are necessary for a satisfactory connection.

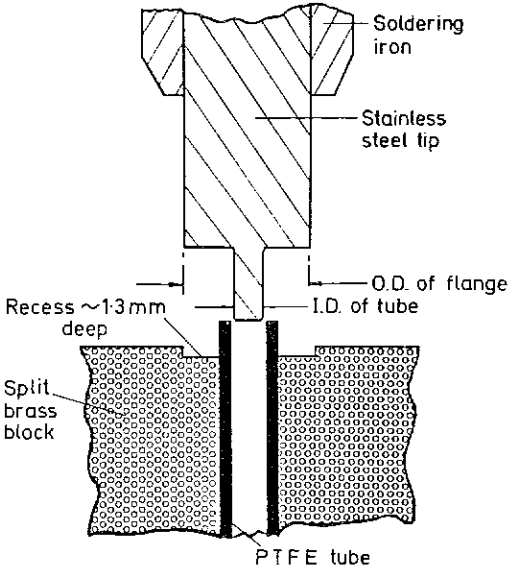

Outside diameter of PTFE tube	Outside diameter of flange
1·6 mm	3·8 mm
3·2 mm	3·8 mm
4·8 mm	7·6 mm

Figure 3.23 Device for producing flanged ends on PTFE tubing. The split brass block is arranged to clamp the PTFE tube as shown. The flanges are formed by inserting the hot stainless steel tool into the tube causing it to flare out into the recess in the cold brass block. The table gives some recommended sizes of flange for various sizes of tube (Chromatronix—see Table 3.7). N.B. A similar device is available commercially from Chromatronix Inc.

The authors have found that for joining metal tubes, compression fittings using copper olives are better than those using brass. Also, compression fittings for nylon should preferably be of the type which support the tube internally at the point of compression (*Figure 3.22*). A satisfactory connector for PTFE tube is also shown in *Figure 3.22*. The end of the tube is flanged using the device shown in *Figure 3.23*.

Quick release couplings are useful, especially for target connections. Some types incorporate a self-sealing device which is automatically activated when the coupling is removed. A connector which may be used singly or in multiples (in one application a bank of 16 has been used) is shown in *Figure 3.24* and has proved satisfactory for pressures up to 14 kg cm^{-2} (200 lb in^{-2}). This type of connector does not incorporate a self-sealing device. Another type of quick release coupling is the disposable plastic luer fitting. These are particularly useful for use with sterile assemblies and in similar

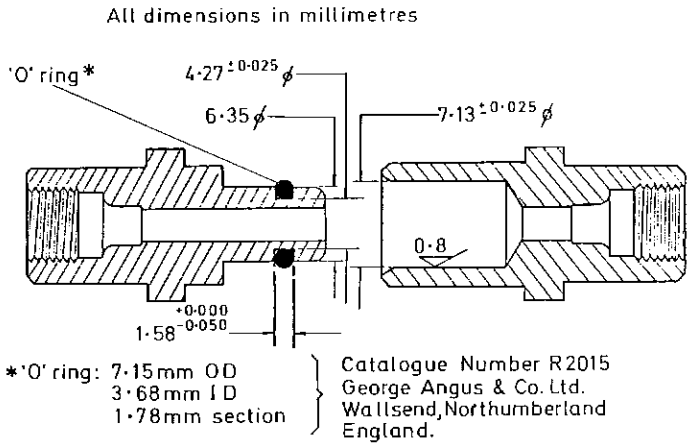

Figure 3.24 Gas plug and socket for use in single or multiway gas tube fittings. This type of connector is suitable for use at pressures up to 14 kg cm^{-2} (200 lb in^{-2}). It is essential that the tolerances shown are adhered to and that a good finish is produced in the bore of the socket. In use, it is preferable to loosely mount one of the units to permit self-centring. This is particularly necessary if multiway fittings having a large number of connectors are to be made

units. This type of connector may also be satisfactorily used semi-permanently for low pressure applications at ambient temperature.

Table 3.7 and *Figure 6.13* list some connectors which have been used successfully in radioactive gas systems.

3.11.3 Pumps

Pumps used in radioactive gas systems should be of the oil-free diaphragm type, preferably with a low volume. A main scavenge pump (*Figure 3.16*) could have a pumping speed of up to 50 l min^{-1}

TABLE 3.7

GAS TUBE CONNECTORS SUITABLE FOR USE IN RADIOACTIVE GAS SYSTEMS

Manufacturer	*Type*	*Quick release*	*Self-sealing on release*	*Material*	*Typical* operating pressure* kg cm^{-2}	*Typical* operating pressure* lb in^{-2}	*Typical* operating temperature* °C	*Type of tubes to be joined*	*Supplier*
Nitex	Compression	No	No	Brass	7.0	100	40	Nylon	Compression Joints Ltd, Oldmixon, Weston-Super-Mare, England
Wade	Compression	No	No	Brass	7.0	100	40	Nylon Copper	Wade Couplings Ltd, Argyle Street, Birmingham B7 5TN, England
Simplifix	Compression (copper olive)	No	No	Brass	7.0	100	40	Copper	Alenco Industrial Components Ltd, Simplifix Division, Belmont Road, Maidenhead, Berkshire SL6 6JP, England
Swagelok	Compression	No	No	Stainless steel	7.0	100	40	Stainless steel	Crawford Fitting Company, 29500 Solon Road, Solon, Ohio 44139, U.S.A.
Avon	Luer	Yes	No	Nylon	2.1	30	40	Plastic	Avon Rubber Co. Ltd, Birmingham 30, England
Chromatronix	Flanged tubing	Yes	No	PTFE	7.0	100	40	PTFE Glass Metal	Chromatronix Inc., 2743 Ninth Street, Berkeley, California 94710, U.S.A.
M.R.C.	Sliding 'O' ring seal	Yes	No	Brass	7.0	100	40	Plastic Metal	Not available commercially (See *Figure 3.24*)
Edwards	'O' ring seal	Yes	No	Brass	7.0	100	40	Metal	Edwards High-Vacuum Ltd, Crawley, Sussex, England
Walther	Self-locking plus poppet valve	Yes	Yes	Brass or Delrin	7.0	100	40	Plastic Metal	Carl Kurt Walther GMBH and Co. KG D56 Wuppertal-Vohwinkel Bahnstr. 43-51, Postfach 277, Germany

* For full range refer to manufacturers' data

(1.77 ft^3 min^{-1}) with an output pressure of 0.16 kg cm^{-2} (~ 2.3 lb in^{-2}) gauge. Circulating pumps for closed circuit systems (*Figure 5.17*) operate at a much lower flow rate, about 8–16 ml s^{-1}, but at a pressure of about 1 kg cm^{-2} (14 lb in^{-2}) gauge. Gas transmission pumps for open circuit systems (*Figure 5.2*) may well have to operate at 16 ml s^{-1} at an output pressure of up to 5 kg cm^{-2} (71 lb in^{-2}) gauge.

Some variation in the output flow rate of diaphragm pumps is possible by adjustment of the output impedance. This may be done using a needle valve at the pump output. It is important to select a diaphragm material which is radiation resistant and leak free. PTFE covered neoprene has proved satisfactory. The authors have found Compton* oil-free diaphragm pumps to be very suitable for use in radioactive gas systems.

3.11.4 Special Techniques

The Preparation of B_2O_3 Stepped Wedges

Stepped wedges for the carbon-11 target described in section 7.3.2 (page 234), may be coated with B_2O_3 using an electric furnace, a muffle furnace being ideal for this purpose. (Heating the wedge with a blow torch or gas flame is not recommended since it has been shown that gases become trapped in the B_2O_3 which subsequently give rise to contaminants in the target effluent gas.)

If a muffle furnace is not available it is possible to construct a simple alternative wedge heating furnace of the type shown in *Figure 3.25*. It contains two 1 kW fire bars 23 cm long and 8 cm wide between which the wedge is placed. The top section is arranged to hinge so as to be able to position the wedge and apply the B_2O_3. When shut, it is parallel to the bottom section and 2.5 cm above it. On opening, the current is automatically cut off with suitably positioned microswitches. For safety reasons it is imperative that the wedge is not touched whilst the furnace is switched on. It will be seen that a safety screen is incorporated in the top section which covers the front of the furnace when it is in use.

When a brass wedge is to be coated its temperature need not be monitored. However, to avoid melting, aluminium wedges should be drilled to take an insulated detachable thermocouple and the temperature monitored during coating, it not being allowed to exceed 450 °C.

* Supplied by Dawson, McDonald and Dawson Ltd, Ashbourne, Derbyshire, DE6 1DB, England.

Before coating, any old B_2O_3 is washed off with hot water and the wedge dried. It is then positioned as shown in *Figure 3.25* and a *thin* layer (~ 2 g) of B_2O_3 powder is applied to the centre of the stepped area. The furnace is shut and the temperature allowed to rise. On heating, the B_2O_3 bubbles and forms large blisters which eventually burst and settle into an even glassy layer, which forms at 400–450 °C. The furnace is then opened, more B_2O_3 is added and the process repeated until a total of about 16 g of B_2O_3 has been applied. This results in a layer having a thickness of 1–2 mm.

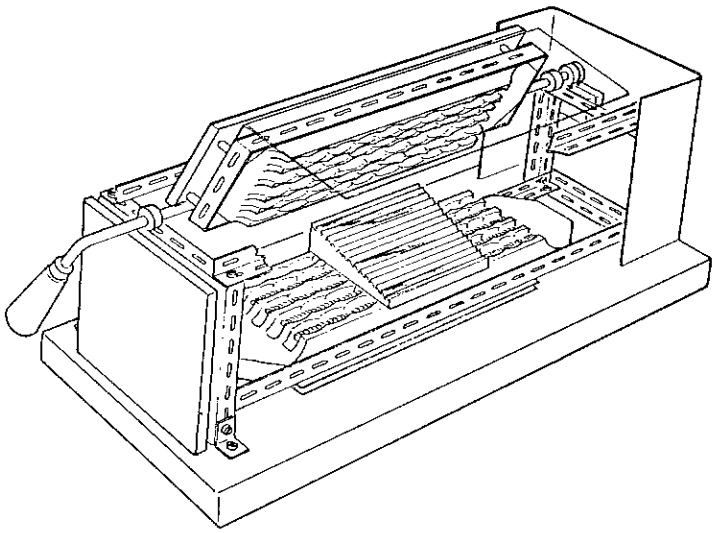

Figure 3.25 Furnace for coating ^{11}C stepped wedges with boron trioxide (B_2O_3)

It is important that only small amounts of B_2O_3 powder are added at each stage since large quantities will form very large blisters which may become stuck to the top of the furnace or overflow the wedge.* Care should also be taken not to apply the B_2O_3 too near to the front of the wedge since during bombardment it may run off and puncture the aluminium foil beam entry window. It should also be kept away from the sides since it could run off and block the sweep gas ports (*Figures 7.5* and *7.6*).

When the coating is complete the furnace is switched off and the wedge left in position to cool slowly. Accelerated cooling may cause

* Heating the B_2O_3 powder to ~ 150 °C for ~ 1 h in an oven can prevent the formation of large blisters when it is subsequently used for wedge preparation. The tendency is then for the powder to sinter into an even glassy layer.

the B_2O_3 to crack badly and even become loose. When cold, the wedge is stored in a desiccator until required for use.

The Design of Cold Traps

Cold traps used for the recovery or storage of radioactive gases should be carefully designed since they may have to withstand very high pressures on warming. Seamless tube should always be used to contain the adsorbent. For medium pressures (up to ~ 21 kg cm^{-2} or 300 lb in^{-2}) copper of an appropriate wall thickness is suitable (*Figure 7.17*). For higher pressures (up to 140 kg cm^{-2} or 2000 lb in^{-2}) stainless steel should be used (*Figure 8.8*). The rated bursting pressure of the tube should be at least six times the maximum working pressure. Brazed joints should be used throughout and when possible extra strength should be given by peening over the ends of the tube or inserting screwed plug(s).

Taps and valves used on cold traps should be of high quality and capable of withstanding the high pressures involved. The use of stainless steel connecting tubes between the taps and the trap reduces heat transfer by conduction, prevents seals freezing and makes the taps safe to handle even when the trap is at its minimum temperature (see also section 3.5.3, page 70).

REFERENCES

1 Ausloos, P. (Ed.) (1968). *Fundamental Processes in Radiation Chemistry*, p. 311. New York; Wiley.

2 Boltz, D. F. (Ed.) (1958). *Colorimetric Determination of Non-Metals*, p. 84. New York; Wiley.

3 *Ibid.*, p. 132.

4 Breach, M. R. (1968). *Sterilization: Methods and Control*, p. 25. London; Butterworths.

5 Brubaker, D. W. and Kammermeyer, K. (1952). 'Separation of gases by means of permeable membranes.' *Industr. & Engng Chem.* **44**, 6, 1465–74.

6 Burchfield, H. P. and Storrs, E. E. (1962). *Biochemical Applications of Gas Chromatography*, p. 132. New York and London; Academic Press.

7 Dale, J. W. G. (1961). 'A beta-gamma ionization chamber for substandards of radioactivity. II: Instrument response to gamma radiation.' *Int. J. Appl. Radiation and Isotopes* **10**, 2, 72–8.

8 Dale, J. W. G., Perry, W. E. and Pulfer, R. F. (1961). 'A beta-gamma ionization chamber for substandards of radioactivity. I: Uses and calibration.' *Int. J. Appl. Radiation and Isotopes* **10**, 2, 65–71.

9 Dodd, R. E. and Robinson, P. L. (1957). *Experimental Inorganic Chemistry*, p. 56. London; Elsevier.

10 *Ibid.*, p. 131.

11 Hislop, J. S. and Williams, D. R. (1971). 'A method for the chemical separation of ^{15}O from ^{13}N and ^{11}C in gaseous species produced by inert gas fusion.' *Radiochem. and Radioanalyt. Letters* **7**, 3, 129–38.

12 Knox, J. H. (1962). *Gas Chromatography*. London; Methuen.

13 Mechanical and physical properties of the austenitic chromium-nickel stainless steels at elevated temperatures (1966). London; International Nickel Ltd.

14 Miller, J. T. (1968). *Principles of Instrumentation*, p. 32. London; United Trade Press.

15 Remy, H. (1956). *Treatise on Inorganic Chemistry*, Vol. 1, p. 693. Amsterdam; Elsevier.

16 Ritchie, A. I. M. (1968). 'The production of the radioisotopes ^{11}C, ^{13}N and ^{15}O using the deuteron beam from a 3 MeV Van-de-Graaff accelerator.' *Nuclear Instrms and Methods* **64**, 181–4.

17 Robb, W. L. (1965). *Thin Silicone Membranes—Their Permeation Properties and Some Applications*. Report 65–c-031. General Electric Research and Development Center, Schenectady, New York.

18 Saltzman, B. E. (1954). 'Colorimetric microdetermination of nitrogen dioxide in the atmosphere.' *Analyt. Chem.* **26**, 12, 1949–55.

19 Welch, M. J., Withnell, R. and Wolf, A. P. (1969). 'An automatic GLPC apparatus for the analysis of organic compounds labelled with short-lived radioisotopes.' *Chem. Instrmtn* **2**, 2, 177–88.

20 Wolfgang, R. and Mackay, C. F. (1958). 'New proportional counters for gases and vapors.' '*Nucleonics* **16**, 10, 69–73.

21 Wolfgang, R. and Rowland, F. S. (1958). 'Radioassay by gas chromatography of tritium and carbon-14 labelled compounds.' *Analyt. Chem.* **30**, 5, 903–6.

Dispensing and Clinical Facilities

4.1 DISPENSING

4.1.1 General

Having been produced and suitably processed, the radioactive gas has to be brought to a convenient area in which it may be safely dispensed. Such an area may be either adjacent to, or in the clinical investigation room. In the latter case extra shielding may be necessary to reduce the background count rate of the clinical radiation detectors.

It is very desirable that all dispensing of radioactive gases is carried out in a well-ventilated fume cupboard. Quite apart from the personal dose received from the accidental inhalation of radioactive gases (many of which are beta emitters), the contamination of the atmosphere in the clinical investigation room may well render the counting equipment quite useless for periods of up to 15 minutes, the actual length of time being determined by the amount and type of room ventilation and the half-life of the nuclide concerned. Thus the routine use of a fume cupboard cannot be too strongly emphasized.

The dispensing apparatus needed varies according to the gas being handled and the clinical requirements. In general, radioactive gas supplied for clinical use in the gas phase does not have to be sterile; that supplied in solution does ('solution' in this context includes labelled blood). Details of specific equipment are given in the relevant chapters of this monograph. However, an item of universal value for the transfer of radioactive gas is the sterile disposable syringe. A selection of such syringes in sizes from 1 ml to 50 ml, together with a supply of disposable needles, blind hubs and multiway stopcocks, will prove invaluable. Other items necessary include disposable luer

connectors (male-to-male and male-to-female) and Millipore filters.* An ionization chamber (high pressure or atmospheric pressure) and its associated amplifier is necessary for the measurement of dispensed samples, and a geiger counter with a movable β absorbing window should be available for general monitoring purposes.

When dispensing radioactive gases every care should be taken to avoid an unnecessary personal dose. Beta absorbing safety spectacles should always be worn. Since the dose to the fingers can be high, especially when handling high activities, finger dosimeters should also be worn. When dispensing ^{133}Xe a significant reduction in personal radiation dose can be achieved if lead loaded gloves and apron are used. Finger doses can also be reduced if syringes containing this nuclide are surrounded by a lead sheath 2–3 mm thick. The only way of reducing personal radiation dose when dispensing other radioactive gases is to work behind a lead wall at least 5 cm thick and use the inverse square law as much as possible!

The total activity of each dispensed sample should be measured prior to its use. It should be noted that if a sample taken from a continuous flow system contains a radioactive contaminant of longer half-life than that of the required radionuclide, the percentage contamination will increase from the moment of dispensing. The information which should be available when supplying samples should include the following: (*a*) total activity; (*b*) time of measurement; (*c*) sample volume; (*d*) radioactive concentration of required and contaminant radionuclides.

Other parameters include the specific activity of the required and contaminant radionuclides, and the stable gas composition. In the case of solutions, the isotonicity, sterility condition and pyrogenicity should be determined by clinically acceptable standard procedures and batch tests.

When routinely dispensing samples of a given radioactive gas, it is convenient to have a calibration chart available so that a direct conversion can be made from the ion chamber reading to microcuries or millicuries. Care should be taken to allow for geometry errors when measuring large gas volume samples in relatively small re-entrant ionization chambers. When the radiation emitted by the nuclide is of low energy, as for example in the case of ^{133}Xe, the absorption in the ionization chamber wall must also be allowed for (see sections 3.7.3, page 79 and 3.7.5, page 85).

4.1.2 Dispensing Gases for Non-sterile Use

Radioactive gases administered by inhalation do not usually need

* Millipore filters supplied by Millipore (U.K.) Ltd, Wembley, England.

to be sterile. The dispensing equipment is therefore extremely simple. In the case of a continuous flow system it may just be a two-way tap from which a sample may be transferred into the dispensing syringe or inhalation bag. When the gas is to be taken from a low pressure storage unit (*Figure 7.19*) or from a trapping system, all that is required are suitable taps and connections. The volume of the dispensed sample may be between 5 ml and 1000 ml depending upon the gas being used, its radioactive concentration and the type of measurement for which it is intended. When necessary the gas may be diluted with a suitable inactive gas either before dispensing, in a continuous flow system, or after dispensing in the case of other systems. Continuous flow systems using hydrogen as a sweep gas should never be diluted with gases containing oxygen; helium or nitrogen should be used. Air, as well as helium or nitrogen may be used in other systems (section 2.2.3, page 29). No single dispensed sample for a 1000 ml inhalation should contain more than 7 ml of hydrogen or 3 ml of carbon monoxide[1,4].

4.1.3 Dispensing Gases for Sterile Use

Gases may be sterilized by passing them through a Millipore filter. Such filters work on the principle of retaining absolutely all particles or micro-organisms larger than the pore size of the chosen filter element. In fact during the filtration of gases, the large specific surface and high resistivity of Millipore filters create substantial electrostatic charges that prevent the passage of particles far smaller than the pore dimension[3]. Consequently in this application the efficiency is increased to such an extent that a 0.5 μm Millipore filter will ensure the sterility of gases.

A particularly suitable filter for use in continuous flow systems is the Millipore gas-line filter holder fitted with a type HA filter having a pore size of 0.45 μm, an effective area of approximately 3.9 cm^2 and a diameter of 25 mm. Such a filter will pass air at a flow rate of about 2.2 ml s^{-1} with an input pressure of 0.014 kg cm^{-2} (0.2 lb in^{-2}). A Millipore filter suitable for use with syringes is the Millex disposable filter unit having a 25 mm diameter filter. A useful pore size is 0.22 μm.

When using a millipore filter it is important that the gas is passed through it in the right direction. To maintain its performance there should be no possibility of liquid entering the filter when it is being used for gas sterilization.

The method of dispensing a radioactive gas for sterile use is determined by the actual application. It may be that the gas is to be drawn into a syringe containing the physiological solution to be

labelled. Alternatively the gas may be continuously bubbled through the solution. Whichever method is used Millipore filtration is necessary.

When blood is being handled for labelling and subsequent re-injection every care should be taken to avoid accidental red cell damage, and, of course, contamination by non-sterile media (see section 7.7, page 253).

4.1.4 Radioactive Gases in Solution

Radioactive gases are obtained in solution by bringing into intimate contact a small volume of gas having a high activity, and the solvent in which the activity is to be dissolved.

The amount of activity passing into solution will depend upon:

(*a*) The solubility of the gas.
(*b*) The specific activity.
(*c*) The radioactive concentration.
(*d*) The temperature and volume of the solvent.
(*e*) The partial pressure of the gas to be dissolved.
(*f*) The efficiency of mixing.

Thus it is important that the dispensed gas should be free of any insoluble gases which would adversely affect parameters (*b*), (*c*) and (*e*).

Figure 6.12 shows an apparatus used for the preparation of high radioactive concentration $^{13}N_2$ saline solutions. It will be seen that the gas is dispensed directly into the apparatus, which is used to increase its radioactive concentration before the actual solution labelling. Since the solutions are required for intravenous injection they have to be sterile and pyrogen free. This necessitates the use of sterile components throughout and strict quality control procedures. Typical batches of solutions destined for intravenous administration should be regularly submitted for pyrogen testing.

Saline solutions containing ^{133}Xe are simpler to prepare since the solubility of xenon is much greater than that of nitrogen. The vigorous shaking of a syringe containing a few millicuries of ^{133}Xe in a few ml of CO_2 with physiological saline solution, followed by ejection of the excess gas is all that is required for the preparation of clinical samples[6]. In order to prevent a loss of solution activity it is advisable to eject the gas bubble through a needle and subsequently allow no gas to come into contact with the solution before use. Isotonic saline solutions suitable for injection, containing ^{133}Xe are available commercially.*

* Supplied by the Radiochemical Centre, Amersham, England.

4.1.5 Dispensing from Storage Systems

Two types of storage system are in common use; high pressure (^{11}CO activated charcoal) and low pressure (^{11}CO molecular sieve and $^{11}CO_2$ copper spiral). In the high pressure system (*Figure 7.16*) the gas is dispensed directly from the trap by first pressurizing a short section of hypodermic tubing and then transferring this volume of gas to the dispensing syringe. In the low pressure system (*Figure 7.18*) the gas is transferred from the trap to the low pressure storage unit from which it may be dispensed at atmospheric pressure. A Millipore filter may be used when dispensing from the low pressure storage unit if the gas has to be sterile. Care should be taken however, not to subject Millipore filters to the pressures found in high pressure storage systems; the gas should be dispensed unsterile and then transferred to a sterile syringe through a Millipore filter.

The number of patient doses which can be obtained from a charge in a given storage system will depend upon the amount of activity required per dose, the time interval between doses, the nuclide's half-life and the total stored activity. Clearly the volume of gas needed for a given dose will increase with storage time.

A special case is the dispensing of ^{133}Xe supplied as a gas in high radioactive concentration in 'break seal' glass ampoules[5,6].

4.2 CLINICAL FACILITIES

4.2.1 The Clinical Investigation Room

The clinical investigation room is the area in which the radioactive gas is finally administered to the patient and the diagnostic measurements are made. Such measurements can range from the simple and routine to the sophisticated and infrequent; in any event careful planning of the clinical investigation room and its facilities is necessary if efficient use is to be made of the radioactive gas production and processing equipment.

The design of a typical clinical investigation suite is shown in *Figure 4.1*. It will be seen that the clinical investigation room is adjacent to both the processing room and preparation area with its dispensing fume cupboard, and a room housing the activity assay and counting electronic equipment. The patient enters and leaves through a changing room; by having more than one such room patients undergoing routine diagnosis can be rapidly investigated.

4.2.2 Personnel

A minimum of four people is generally required to operate an

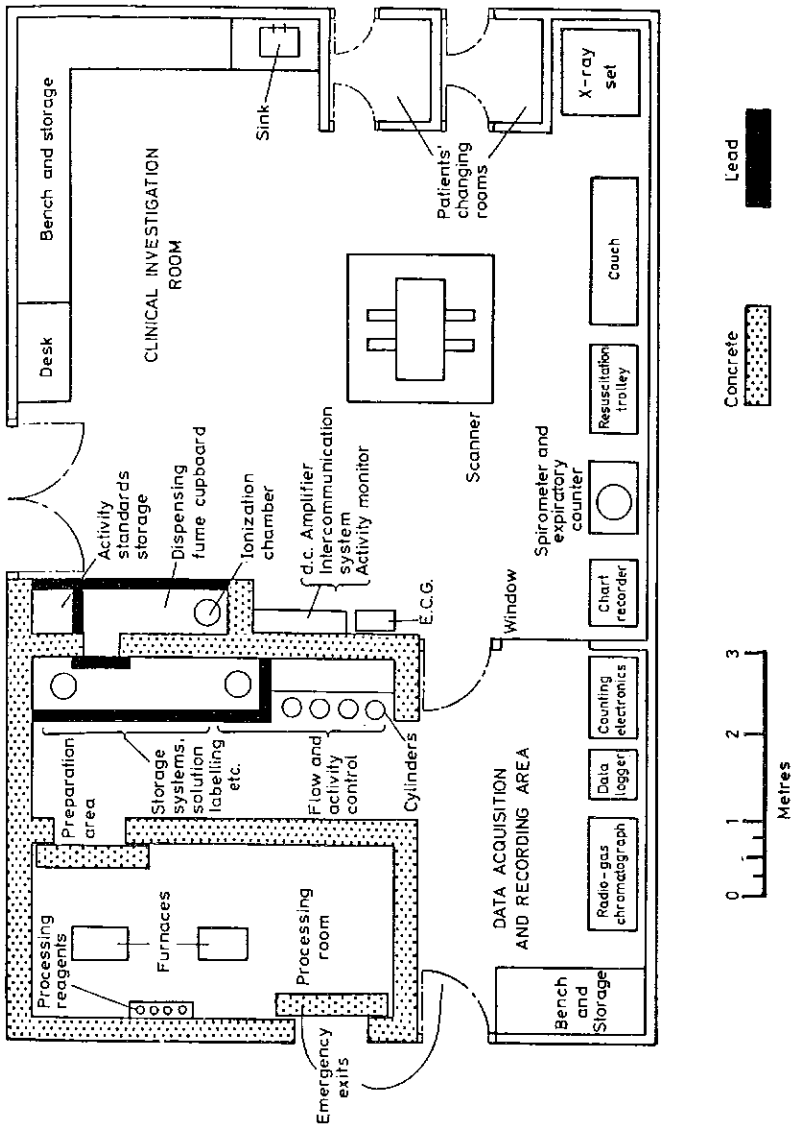

Figure 4.1 Layout of a typical clinical investigation suite

'on line' radioactive gas system: the cyclotron operator, a technician to operate the processing, dispensing, activity assay and recording equipment, another technician to assist in the clinical diagnostic procedure and a clinician to administer the radioactive gas and carry out the diagnostic measurements.

In practice as many as six people may be involved since local regulations may make it necessary to have a second cyclotron operator available, and the clinician may require the assistance of a nurse or radiographer, especially if the patient is elderly or requires catheterization.

4.2.3 Layout

With a few notable exceptions the layout of equipment and facilities in the clinical investigation suite is not critical. That shown in *Figure 4.1* is typical and may be varied to suit existing local conditions or individual requirements.

In order to minimize the background count rate the clinical counting equipment should be placed as far as possible from all sources of activity although not in a corner since it is usually necessary to have free access from all sides when positioning the patient. It should also be possible to remove the patient rapidly from the equipment in the event of any emergency such as fire or cardiac arrest. All cables and expiratory gas tubes connected to the counting equipment should be routed either in ducts under the floor or at ceiling height.

Ideally all radioactive gas dispensing equipment should be situated in one corner of the room and be well shielded. As can be seen from *Figure 4.1* the dispensing fume cupboard is set into one wall of the clinical investigation room. At the rear of the fume cupboard is the well-shielded processing room and the preparation area where solutions can be labelled and passed through a small hatch to the dispensing fume cupboard. The radioactive gas system is controlled from the preparation area which also houses the sweep and diluting gas cylinders. It may be convenient to have a remote activity (yield) indicator in the clinical investigation room. The preparation area and processing room should be force ventilated by extract fans, preferably with their exhaust ducts continuously monitored with radiation detectors.

The data acquisition and recording area houses the radio-gas chromatograph and most of the electronic equipment associated with the clinical counters. It will be seen however that the recorder is sited in the clinical investigation room in order that the clinician may have direct access to the data during a measurement. In some

cases it may be preferred to have the counting electronic equipment in the clinical investigation room also. However, noisy items such as the data logger (punched tape digital recorder) should be placed out of earshot of the patient if possible.

Provision should be made for fire risk, emergency exits and fire extinguishers being strategically placed.

These are the general principles upon which an ideal clinical investigation suite may be designed, and provided they are adhered to the actual layout can be varied as necessary.

4.2.4 Services

Essential services in the clinical investigation room include the following:

(*a*) Mains electricity supply available from plenty of power outlets placed at convenient positions.

(*b*) Mains water with a sink and washing facilities.

(*c*) Suitable thermostatically controlled heating, especially if a gamma camera is used.

(*d*) Air conditioning (closed circuit ventilation could be disadvantageous if there were an accidental leak of radioactive gas).

(*e*) An extract system to ventilate the dispensing fume cupboard (a minimum flow rate of 1·2 m^3 min^{-1} is desirable for a small fume cupboard).

Auxiliary services depend to some extent upon the type of equipment being used. For instance, an on-line computer data link is a decided advantage. The result of a given measurement could then be rapidly available, enabling the clinician to make an immediate assessment of the patient's condition and if necessary perform further tests. A digital recording system is of value when off-line data processing is to be carried out.

When radioactive gases are being produced by continuous flow systems, a two-way communication system between the clinical investigation room, the preparation area and the cyclotron control room, is almost a necessity. Quite apart from saving valuable cyclotron running time (especially if only short spells of radioactive gas production are required), such a system allows immediate action to be taken in the event of equipment failure.

A service which is easily overlooked is that of providing liquid refreshment for the patient. Some tests involve prolonged sessions of breathing through a mouthpiece whilst wearing a nose clip. For some patients this can be quite unpleasant and a cup of tea or coffee at the conclusion of the session is often appreciated.

4.2.5 Equipment

Counting Equipment

The most important piece of equipment in the clinical investigation room is the counting device used for the diagnostic measurements. If only simple pulmonary function measurements are to be made this may be just a pair of scintillation counters, one mounted

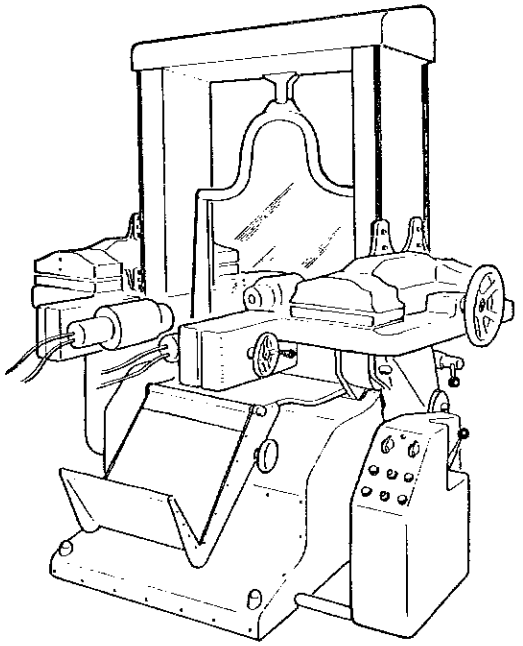

Figure 4.2 Four channel scinti-scanner for pulmonary and cardiac function studies using short-lived radioactive gases

anteriorly and the other posteriorly about the patient, and free to move together in the vertical plane. Conversely if highly sophisticated studies are envisaged the corresponding equipment may well be a scintiscanner having four (or more) scintillation counters, a gamma camera, or multicrystal positron camera.

A particularly useful device is the type of scanner shown in *Figure 4.2*. This has four scintillation counters (each incorporating a preamplifier and independently movable in the horizontal plane) mounted in a large gantry in which the patient is positioned. Either a given pair (anterior and posterior) or all four counters can be

driven at a maximum scan rate of 4 cm s^{-1}. The direction of scan may be either vertical or horizontal with the patient positioned accordingly.

The sodium iodide crystals used should not be of too small a diameter, a minimum of about 4 cm being desirable. Their depth depends upon the nuclide to be counted. For ^{133}Xe the depth need only be about 0.6 cm; in fact a greater thickness only increases the background count rate. For other radioactive gases however, the minimum satisfactory crystal depth is the order of 2.5 cm.

The type of collimator used with the scintillation counters varies according to the nuclide being used and the type of measurement being made (fixed counter or scanning). Fixed counters are usually used with conical collimators resulting in a roughly cylindrical field of view between the counters. For scanning, however, greater count rates are obtained by using a rectangular design which allows little resolution across the field of view but affords a high degree of resolution in the vertical plane. The weak radiation from ^{133}Xe is easier to collimate than the relatively hard radiation resulting from positron emitting nuclides. Hence if only ^{133}Xe is to be used the collimators and supporting structure can be relatively light and inexpensive compared with those used with nuclides emitting higher energy radiation. Some typical collimators are shown in *Figure 4.3*.

Other counting equipment may include a scintillation counter for expiratory measurements and another for monitoring gas used in closed circuit ventilation studies in which the patient breathes from a spirometer. An essential piece of equipment in any clinical investigation room is a small portable geiger counter having a movable β absorbing window for leak detection (section 9.6, page 320).

Since even the best equipment can fail it is always a good idea to have a spare scintillation counter available for rapid replacement. This may sound an expensive investment. However when set against the cost of cyclotron running time and general inconvenience to patients and staff, the cost is well justified.

Electronics

The complexity of the electronic equipment depends largely upon the number of counting channels used and whether the counters are to be arranged for parallel or coincidence counting.

Figure 4.4 shows schematically the minimum number of electronic units required for an array of four scintillation counters arranged for parallel counting. Since it is usually necessary to count only the photoelectric peak when making clinical measurements, biassing or pulse height analysis is necessary. The ratemeters and recorder

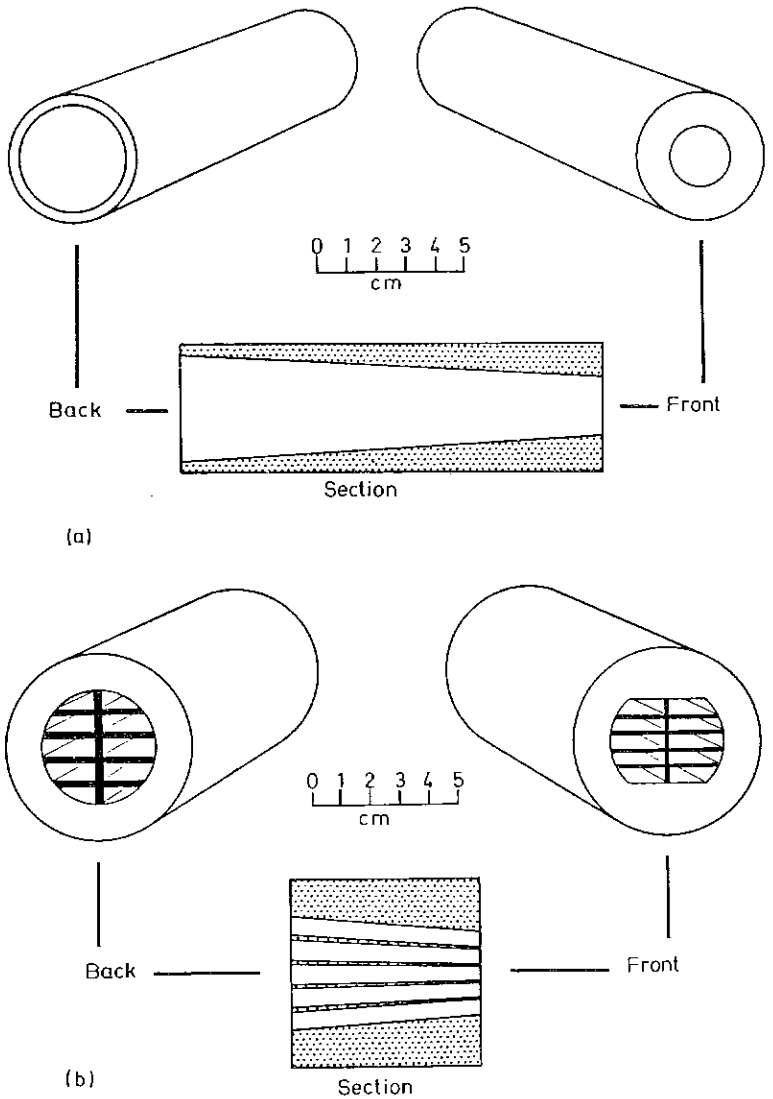

Figure 4.3 (*a*) Lead collimator for use with positron emitting nuclides; (*b*) Lead collimator for use with ^{133}Xe

should have time constants sufficiently short to permit accurate ventilation measurements to be made when the patient inspires rapidly. The use of potential dividers with the EHT supply requires

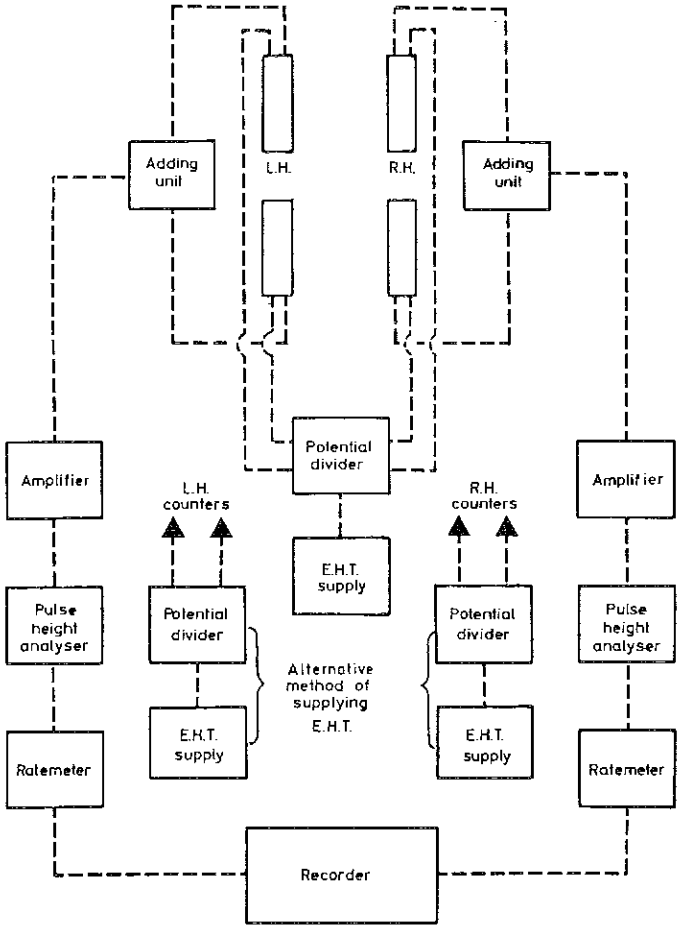

Figure 4.4 Schematic arrangement of electronic units for 'parallel' counting using four scintillation counters

the latter to have a high output current capability since each potential divider current drain should be at least ten times that of the photomultiplier tube and dynode chain at the maximum count rate. When it is impossible for an EHT unit to meet these requirements an alternative arrangement is to use two EHT units as shown in

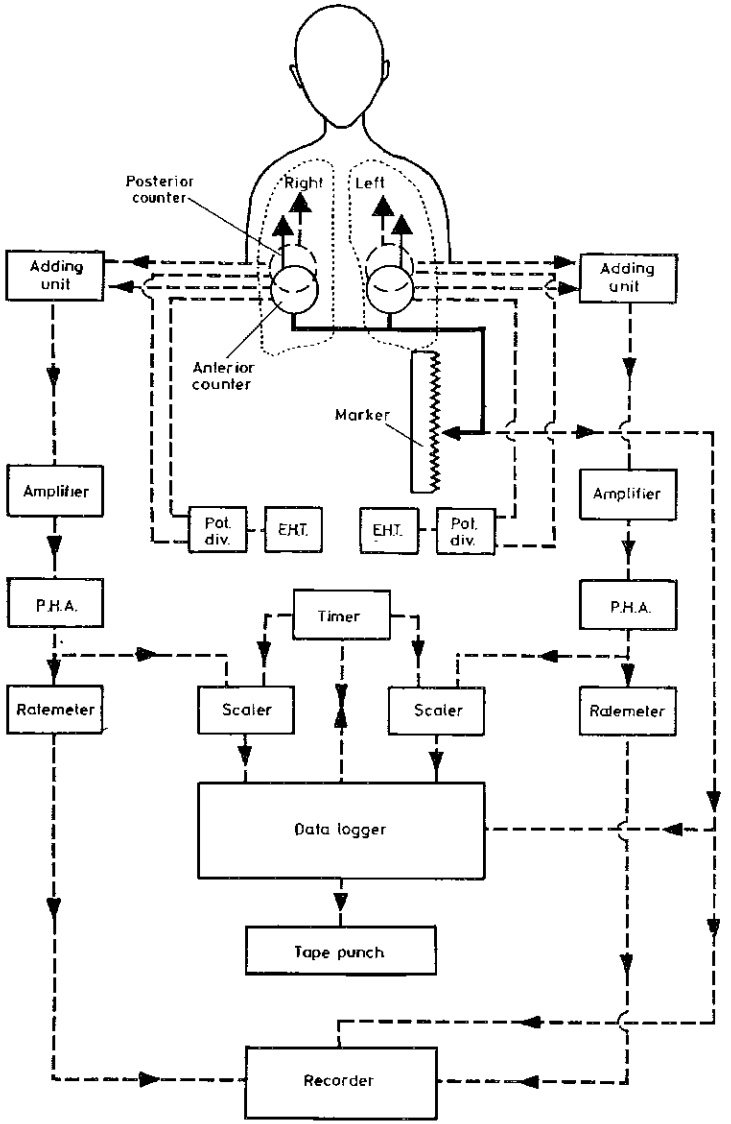

Figure 4.5 Schematic diagram to illustrate counting system during lung scanning. Radioactivity within the lung is detected by paired scintillation counters over the front and back of each lung. The output from each side is summed in an adding unit, amplified and passed through a pulse height analyser (PHA). The remaining signals are then fed through ratemeters to an ultraviolet recorder, but for automated data collection the signals are seen by a scaler timer chain linked to a data logger and its associated paper tape punch. (Reproduced from *Medical and Biological Engineering*.)

Figure 4.4 (such an arrangement also has the advantage of allowing greater flexibility when setting up pulse heights).

When large numbers of patients are being routinely investigated, the time and labour taken to analyse the results can be greatly reduced by using an alternative system of data collection to that shown in *Figure 4.4*. One such system used for vertical lung scanning investigations is shown schematically in *Figure 4.5*. The measurement is made while the counters are raised at a speed of about 3 cm s^{-1}. During the scan a microswitch is actuated by serrations set at 2 cm intervals in a metal strip on the side of the scanner. Using this switch to actuate a data logger, the counts recorded in 'slices' of lung 2 cm thick are continuously integrated and recorded on punched tape as the scan proceeds. The tape is subsequently processed by a computer. The output count rate is also displayed during the scan by a recorder, thus providing an immediate indication of the result of the measurement as well as duplicate information[2].

As with scintillation counters, it is always advisable to have spare electronic units available for immediate replacement. By standardizing on one of the modular systems currently available this becomes a simple matter limited only by one's budget.

The recorder used with the counting equipment should be carefully selected. Of particular importance is the speed of response. It should not take longer than 0.1 seconds for the instrument to indicate 90 per cent of full-scale deflection starting from zero. Fast pen recorders are available with this kind of response using ink or hot wire systems. Of particular merit is the ultra-violet recorder using miniature galvanometers. Models are available which can take up to 25 or more such galvanometers resulting in a highly versatile multichannel instrument. Being so small (typically about 3 mm diameter) the galvanometers have an upper frequency limit of several kilohertz and their low input impedance (typically 35 ohms) and high sensitivity (typically 0.05 mA cm^{-1}) make them eminently suitable for use with solid state electronic equipment. Ultra-violet recorders are available with chart speeds ranging from 1 mm s^{-1} to 2 m s^{-1}. A useful speed is about 2 cm s^{-1}. Since it is invariably necessary to record time events such as inspiration, expiration or the counter position in scanning, at least one marker facility is desirable. It can also be sound policy to invest in a recorder having a potentially greater number of channels than one's immediate requirements dictate since some sophisticated studies can require the simultaneous recording of up to eight or more parameters. With the UV recorder this is possible since galvanometers are easily added

when required. An instrument capable of taking 12 galvanometers should be adequate for most types of clinical investigation.

It may be necessary to include a stabilized mains supply for the counting electronic equipment. Clearly its size will depend upon the load but a servo operated mains stabilizer of 2.5 kVA rating should be adequate for most purposes where solid state electronics are being used.

An item of electronic equipment which is practically indispensable for setting up counting equipment and for general fault finding, is a good quality oscilloscope. This needs to have a bandwidth of not less than 10 MHz and a time base with delayed triggering.

Other pieces of electronic apparatus necessary for the clinical investigation suite include three ionization chambers and d.c. amplifiers (or electrometers) and a radio-gas chromatograph.

It will be seen that an x-ray set is included in *Figure 4.1*. Whilst not necessary for many studies using radioactive gases, it can be of value if frequent cardiac catheterization is to be carried out.

Ancillary Equipment

The range of equipment used for dispensing radioactive gases is described earlier in this chapter. In addition to items generally used for studies in respiratory physiology, the apparatus to be found in a typical clinical investigation room may well include the following:

(*a*) Various types of collimator for use with scintillation counters.
(*b*) A spirometer for closed circuit ventilation studies.
(*c*) A spirometer for use with inactive gases.
(*d*) Spare mouthpieces and inhalation bags.
(*e*) A range of catheters.
(*f*) Extract facilities to cope with expired active gas in pulmonary washout investigations.

Transducers may be necessary for the measurement of parameters such as inspired flow rate, heart chamber pressure and spirometer volume. In some cases it may be considered necessary to include an electrocardiograph (ECG) machine and a resuscitation trolley as part of the equipment to be found in the clinical investigation room.

4.2.6 Standards and Calibration

In general, the method of setting up scintillation counters and counting electronics differs little from standard practice. Simple biassing or preferably pulse height analysis is normally used when making clinical measurements. Since the photoelectric peak varies from 80 keV for ^{133}Xe to 511 keV for the positron emitting gases, a fairly wide range of channel gain is needed.

One way of setting up a four-channel scintiscanner of the type depicted in *Figure 4.5* is to use a standard extended source as shown in *Figure 4.6*. Such a source should have the activity homogeneously distributed throughout its volume and contain a long-lived nuclide which emits γ-rays of an energy which corresponds closely to those of the nuclide to be used clinically. Typical standard sources are

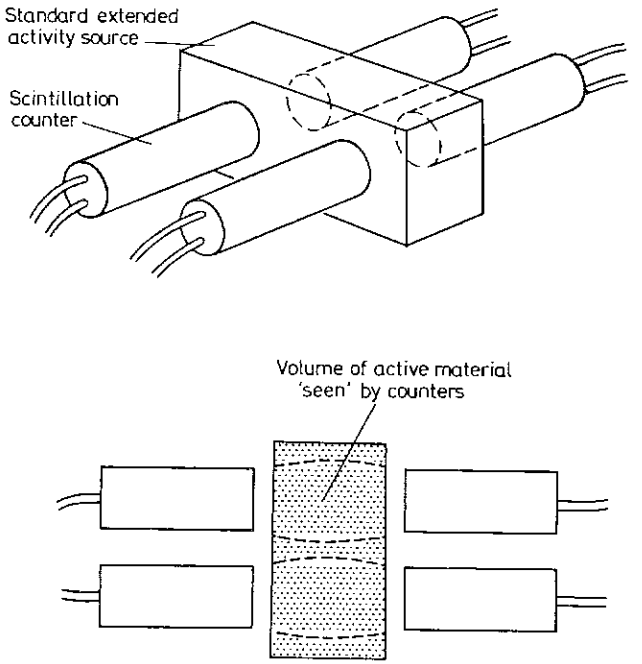

Figure 4.6 The use of a standard extended source of activity to calibrate a four channel scinti-scanner

^{170}Tm ($T_{\frac{1}{2}}$ = 127 d Eγ = 80 keV) and ^{68}Ge ($T_{\frac{1}{2}}$ = 275 d, β^+ from decay of daughter product ^{68}Ga). With the standard source positioned as shown in *Figure 4.6* each counter will receive quanta from a similar volume of active material. Pulse height adjustment can be made for all four counters using a combination of amplifier gain and EHT settings. When using an EHT supply in conjunction with potential dividers it is worth noting which scintillation counter needs the highest value of EHT before any adjustments are made; the EHT voltage can then be set at this value and all other voltages derived from the potential dividers. As was mentioned earlier in

this chapter the potential divider current drain needs to be high compared with that of the scintillation counter which it supplies. Failure to achieve this results in a variation of output pulse height with respect to count rate, a phenomenon which can cause large errors, especially if a narrow pulse height analyser window width is being used. Another factor which may cause a similar phenomenon is pulse pile up when using amplifiers with poor overload characteristics, at high count rates. This may be mitigated by using non-overloading amplifiers of the double delay line type.

Having carried out the energy calibration it is necessary to note the relative response of each pair of counters since this will be required for analysis of the clinical data. It is also advisable to check the calibration at intervals during a clinical session.

Although 'parallel' counting is widely used, positron emitting nuclides offer the possibility of 'coincidence' counting with its inherently high degree of spatial resolution. Unfortunately the count rate is often too low to give sufficient statistical accuracy, hence its limited application. The procedure when setting up for coincidence counting is essentially the same as that for parallel counting with the exception that careful adjustment of channel delay times is necessary. The coincidence resolving time also needs careful selection. If it is too short, valuable coincidence counts will be lost; if too long, a high number of random coincidences will be counted.

The calibration of the ionization chambers should be regularly checked. This is conveniently done using a 1 mg radium standard.

4.2.7 Clinical Measurements

Since this is essentially a technological monograph it is outside our scope to enter into a detailed discussion of clinical procedures. The clinical results of the uses of short-lived radioactive gases are well documented, and the reader's attention is drawn to the bibliography at the end of chapter 1 and the reference list at the end of other chapters.

New uses for short-lived radioactive gases are continually being found. However, it can be safely said that their principal value at the present time lies in the investigation of the clinical conditions listed in Table 1.1 and referred to in section 1.5.

Administration of the radionuclide is usually by inhalation of a labelled gas or by intravenous injection of a labelled physiological fluid such as whole blood, red cells, normal saline solution or water.

REFERENCES

1. Coward, H. F. and Jones, G. W. (1952). *Limits of Flammability of Gases and Vapors.* Bulletin 503, Bureau of Mines, Government Printing Office, Washington 25, D.C., U.S.A.
2. Kingaby, G. P., Glazier, J. B., Hughes, J. M. B., Maloney, J. E. and West, J. B. (1968). 'Automation of data collection and analysis in lung scanning with radioactive gases.' *Med. and Biol. Engng* **6**, 403–8.
3. Megaw, W. J. and Wiffen, R. D. (1963). *Int. J. Air Wat. Poll.* **7**, 501–9.
4. Polson, C. J. and Tattersall, R. N. (1959). *Clinical Toxicology*, p. 550. London; English Universities Press.
5. Veall, N. (1965). 'The handling and dispensing of Xenon-133; gas shipments for clinical use.' *Int. J. Appl. Radiation and Isotopes* **16**, 385–7.
6. West, J. B. (1967). *The Use of Radioactive Materials in the Study of Lung Function.* Medical Monograph No. 1. Amersham, England; The Radiochemical Centre.

Oxygen-15

5.1 INTRODUCTION

Oxygen-15 is a cyclotron produced radionuclide having a half-life of 2.07 min and decaying by the emission of positrons having a maximum energy of 1.7 MeV, to the stable nuclide nitrogen-15 (*Figure 5.1*)[13].

Oxygen-15 which was one of the first gaseous radionuclides to be used for routine clinical investigation[10,15,17,20,21,28,33] is now produced at several centres of nuclear medicine and is used to label molecular oxygen, carbon dioxide and carbon monoxide[11,14,18,24,32,36,38,40]. Water labelled with ^{15}O is also made and is used in the preparation of physiological saline solutions of high radioactive concentration[24,35,39,42]. Whole blood is also regularly labelled with $^{15}O_2$[24,35]. Common applications include regional pulmonary ventilation[22,34,41] and blood flow studies[16,41,43], cardiac malfunction investigations[14,19] and the estimation of cardiac output, myocardial[26], renal and cerebral blood flow[35]. The 0.511 MeV gamma radiation resulting from positron annihilation allows organ visualization using a gamma camera[26] or measurements over regions of interest using an array of fixed detectors[9].

The short half-life of oxygen-15 is advantageous in minimizing the radiation dose to the patient and when making serial measurements, but can be a disadvantage when prolonged individual studies are necessary. The short half-life also makes it essential that clinical facilities for the use of this radionuclide are sited close to the point of production, the associated production and processing equipment requiring careful design to minimize an unnecessary loss of activity by decay. Where possible 'on line' production systems are to be

preferred. In such systems the radioactive gas is continuously produced and processed, making it available throughout the whole of a clinical session. When continuous production is not possible or uneconomic, batch-wise production is used either 'on line' or in conjunction with rapid transport facilities.

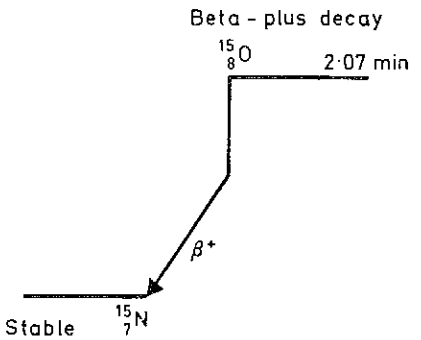

Radiation	Per cent per disintegration	Transition energy (MeV)
Beta plus	100	1·70*
Reference:	(13)	
*Endpoint energy (MeV)		

Figure 5.1 Oxygen-15 decay scheme

5.2 TARGET DESIGN

From Table 2.1 it will be seen that ^{15}O may be produced by two nuclear reactions, both of which have quite a low Q value. However, because of the high natural isotopic abundance of ^{14}N, that which is invariably used is the $^{14}N(d,n)^{15}O$ reaction (Table 5.1).

It will be seen from this reaction that a gas may be used as the target material. Because of this the target has to be either operated at an elevated pressure or be relatively long in the direction of the beam path (or both) for the energy of the incident charged particles to be reduced, within the gas volume, to the practical threshold for the desired nuclear reaction[23].

Initial design considerations are determined by the energy, size

and distribution of the available charged particle beam, since these parameters directly affect the window material and thickness, cooling requirements and the cross-sectional area of the target.

It is then necessary to decide on the pressure at which the target is to be used since this determines its dimensions and the distance over which it is possible to transmit the target output gas (without pumping), at a flow rate consistent with the half life of ^{15}O.

TABLE 5.1

SOME PHYSICAL CHARACTERISTICS AND CLINICAL USES OF ^{15}O

Half-life (min)	*Principal emissions*	*Nuclear reactions for production in typical target systems*	*Practical threshold energy** (MeV)	*Typical available† radioactive concentration and specific activity* (20°C 760 mm Hg)	*Clinical uses and references*
2.07	β^+ 1.70 MeV 1.00 per disintegration resulting in 2.00 0.511 MeV annihilation gamma photons per disintegration.	$^{14}N(d,n)^{15}O$	~ 3	0.2 mCi ml^{-1} 120 mCi mM^{-1} O_2	Regional pulmonary ventilation and blood flow. Cardiac malfunction, myocardial, renal and cerebral blood flow (14, 16, 19, 22, 26, 34, 35, 40, 41, 43)

* Derived from data in 'The production of the radioisotopes ^{11}C, ^{13}N and ^{15}O using the deuteron beam from a 3 MeV Van de Graaff accelerator.' A. I. M. Ritchie. *Nuclear Instruments and Methods* 64, 181–4 (1968).
† Based on relevant data contained in this work.

It is usually desirable to use a relatively high target pressure since this allows the use of long small diameter gas transmission tubes with their inherent high transport rate characteristics. The impedance of such tubes to the target output gas flow is primarily determined by their length and diameter; when long tubes are used their impedance alone can usually be made sufficient to maintain the target at optimum working pressure (*Figure 5.2 (a)*). Even when it is required to transmit the product nuclei over a short distance it is still preferable to use a high pressure target and small diameter tubes, but with a needle valve to optimize the impedance of the system (*Figure 5.2 (b)*).

The advantages of using a high pressure target can only be realized if the beam entry window is sufficiently strong under all anticipated

irradiation conditions. This is not difficult to achieve if the beam energy is high enough to require degrading since a relatively thick filter/window may be used, provided it can be effectively cooled. It is when only low beam energies are available that serious difficulties can arise in the design of ^{15}O targets[38]

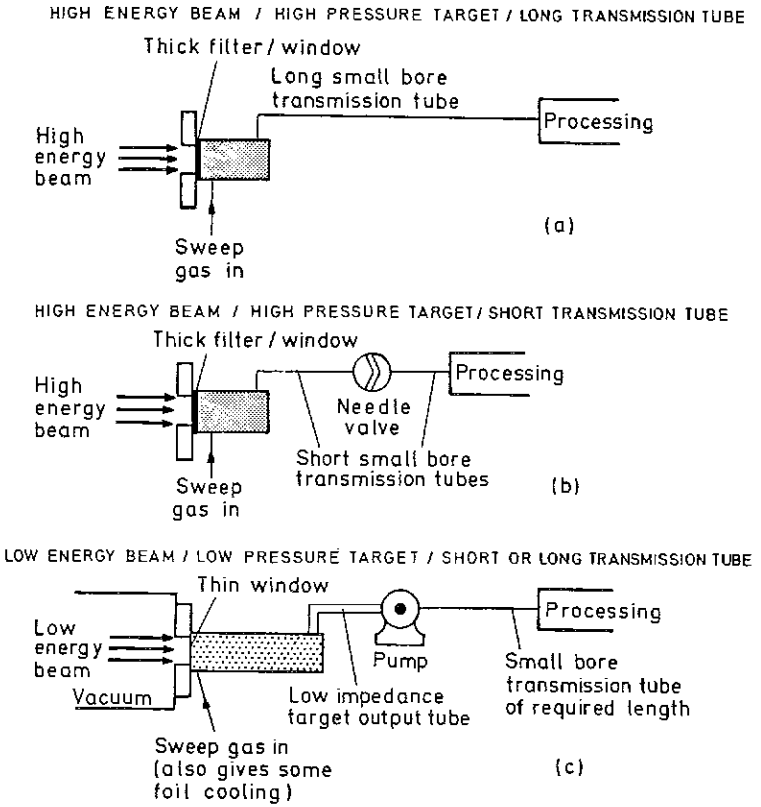

Figure 5.2 Types of gas transmission system for use with various oxygen-15 targets

Clearly if the energy of the available beam is close to that required for radionuclide production in good or moderate yield, it is undesirable to degrade the beam more than is necessary. This leads to the use of a very thin beam entry window[38], or no window at all[30], which can result in a severe limitation on the maximum target working pressure. Thus the impedance of the gas transmission system has to be low and one may well be left with the problem of

having to send the ^{15}O over a considerable distance under these conditions. The only really effective solution is to use a pump, as shown in *Figure 5.2 (c)*. The target pressure is maintained by the setting of the sweep/target gas cylinder pressure reducing valve, and the impedance of the gas transmission tube following the pump can be optimized to match the pump's performance.

Generally speaking, low pressure targets are longer in the direction of the beam path than those used at higher pressures, but as we

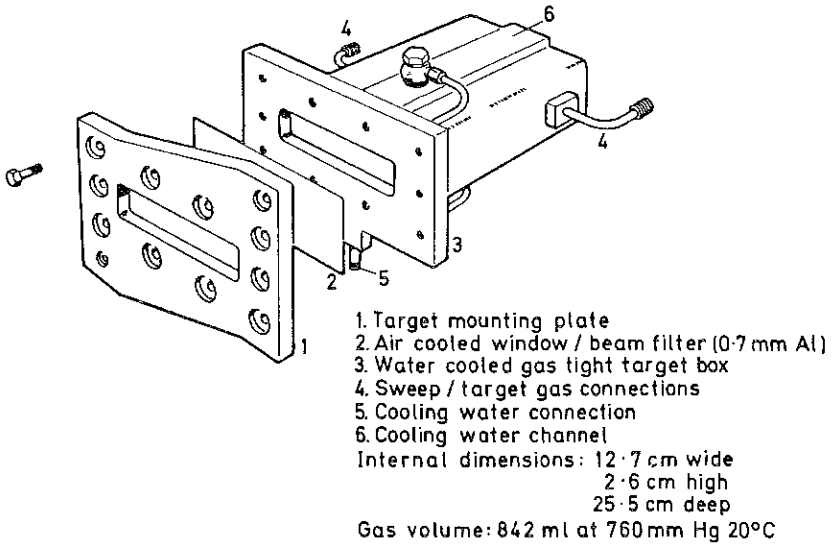

Figure 5.3 Target for oxygen-15 production

have seen, many interdependent parameters need to be considered and a target designed for use with one particle accelerator may be quite unsuitable for use on another.

An oxygen-15 target[37] for use with the 16 MeV deuteron beam[7] of the MRC cyclotron is shown in *Figure 5.3*. To degrade the beam energy to approximately 6.3 MeV a 0.7 mm aluminium beam filter is used which also acts as the target window. The depth of the gas in the direction of the beam path is 25.4 cm. Ideally this is sufficient to reduce the filtered beam energy to ~ 3 MeV (the practical threshold energy for the $^{14}N(d,n)^{15}O$ reaction) at the normal working pressure

of 0.54 kg cm^{-2} (7.7 lb in^{-2}) above atmospheric pressure. A typical sweep/target gas flow rate is about 8 ml s^{-1}. The dimensions of the beam entry port are 12.7 cm wide and 2.6 cm high. (Due to variations in the position and distribution of the spread beam it was necessary to make the width of the target greater than that desirable for a minimum gas volume.) Both air and water cooling are used. An air blast directed onto the filter/window removes much of the 290 W of heat deposited in this component at the normal beam current of 30 μA. The front plate, its 'O' ring and the target box are cooled by water circulating in appropriately positioned channels (*Figure 2.5 (a)*). The target, which is rigidly constructed, is entirely of aluminium, with the exception of external brass, copper and plastic fittings. Sweep gas connections are $\frac{1}{16}$ in vacuum fittings.

This target is used for the direct production of $^{15}O_2$ (^{15}OO) and $C^{15}O_2$ ($C^{15}OO$) by the $^{14}N(d,n)^{15}O$ reaction and the use of an appropriate sweep/target gas composition (Tables 5.2 and 5.3). Provided the beam filter reduces the incident beam energy to ~ 6.3 MeV, no detectable contaminant radionuclei are formed. However, if the thickness of the aluminium beam filter is reduced to 0.25 mm, the emergent beam energy is ~ 10 MeV which results in the production of considerable quantities of ^{11}C and ^{13}N from the $^{14}N(d,\alpha n)^{11}C$ and $^{16}O(d,\alpha n)^{13}N$ reactions.

5.3 SWEEP/TARGET GASES, YIELDS AND IRRADIATION CONDITIONS

5.3.1 $^{15}O_2$ Experimental Production

In order to investigate some of the parameters that affect the production of $^{15}O_2$ from a nitrogen target by the $^{14}N(d,n)^{15}O$ reaction a gas flow system was set up as shown in *Figure 5.4*. A fixed deuteron energy of ~ 6.3 MeV was chosen as this had been shown to limit the production of the longer-lived impurities ^{11}C and ^{13}N and also suppressed the $^{14}N(d,2n)^{14}O$ reaction (Q = −8.115 MeV). A series of O_2 in N_2 mixtures was prepared as described in section 3.10.1 (page 89) with oxygen concentrations of 0.5, 1, 2, 3 and 4 per cent. Irradiations were carried out under the conditions shown in Table 5.2. Nitrogen (purity 99.9 per cent) was also used although this gave rise to very variable results. The radioactive concentration was measured continuously before and after the soda lime absorber using 10 ml volume Cu spirals placed in high pressure ionization chambers (see section 3.7.1, page 73). Samples for radio-gas chromatographic analysis were taken at the

TABLE 5.2

PERFORMANCE OF TARGET FOR EXPERIMENTAL ^{15}OO PRODUCTION USING DIFFERENT SWEEP/TARGET GASES

Particle	Deuteron
Nuclear reaction	$^{14}N(d,n)^{15}O$
Current	30 μA
Energy	16.1 MeV
Energy incident on target material	~ 6.3 MeV
Window material and thickness	Al 0.70 mm
Energy loss in window	~ 9.8 MeV
Beam distribution dimensions (see section 2.4)	2.0–2.5 cm wide; 1.0–1.5 cm high
Target dimensions	12.7 cm wide, 2.6 cm high, 25.5 cm deep. Gas vol. 842 ml at 760 mm Hg 20°C
Target pressure	0.54 kg cm^{-2} (7.7 lb in^{-2}) gauge
Sweep/target gas flow rate	8.33 ml s^{-1}
Target output to system output	~ 10 m

Sweep/target gas	*Per cent of total recovered activity at target output*						*Total recovery at target output*		
	^{15}OO	$N_2{}^{15}O$	$C^{15}OO$	$N^{15}OO$ + ^{15}OOO	$C^{15}O$	^{13}NN	mCi s^{-1}	mCi ml^{-1} 760 mm Hg 20°C	mCi mM^{-1} O_2 760 mm Hg 20°C
Nitrogen*	35	1.4	2.6	61	< 0.1	< 0.1	0.16	0.02	1.7×10^4
0.5% O_2 in N_2	96	3.6	< 1	< 0.1	< 0.1	< 0.1	1.9	0.23	1.1×10^3
1% O_2 in N_2	96	3.6	< 1	< 0.1	< 0.1	< 0.1	2.3	0.28	6.5×10^2
2% O_2 in N_2	96	2.9	< 1	< 1	< 0.1	< 0.1	2.3	0.28	3.2×10^2
3% O_2 in N_2	96	2.5	< 1	< 1	< 0.1	< 0.1	2.3	0.28	2.2×10^2
4% O_2 in N_2	97	2.2	< 0.1	< 1	< 0.1	< 0.1	2.3	0.28	1.6×10^2
Tolerances %		> 90 ..... ± 1 10–90 ..... ± 50* < 10 ..... ± 50					± 10		

* Data subject to wide variations due to variable losses of products in the gas flow system.

TABLE 5.3

PERFORMANCE OF TARGET FOR EXPERIMENTAL $C^{15}OO$ PRODUCTION USING DIFFERENT SWEEP/TARGET GASES

Particle	Deuteron
Nuclear reaction	$^{14}N(d,n)^{15}O$
Current	30 μA
Energy	16.1 MeV
Energy incident on target material	~ 6.3 MeV
Window material and thickness	Al 0.70 mm
Energy loss in window	~ 9.8 MeV
Beam distribution dimensions (see section 2.4)	2.0–2.5 cm wide, 1.0–1.5 cm high
Target dimensions	12.7 cm wide, 2.6 cm high, 25.5 cm deep. Gas vol. 842 ml at 760 mm Hg 20°C
Target pressure	0.61 kg cm^{-2} (8.7 lb in^{-2}) gauge
Sweep/target gas flow rate	8.33 ml s^{-1}
Target output to system output	~ 10 m

Sweep/target gas	*Per cent of total recovered activity at target output*					*Total recovery at target output*		
	$C^{15}OO$	$C^{15}O$	^{15}OO	$N_2{}^{15}O$	^{13}NN	mCi s^{-1}	mCi ml^{-1} 760 mm Hg 20°C	mCi mM^{-1} CO_2 760 mm Hg 20°C
0.25% CO_2 in N_2	99	< 1	< 1	< 0.1	< 0.1	1.5	0.18	1.7×10^3
1% CO_2 in N_2	99	< 0.1	< 1	< 0.1	< 0.1	1.8	0.21	5.0×10^2
2.5% CO_2 in N_2	99	< 0.1	< 1	< 0.1	< 1	1.8	0.21	2.0×10^2
5% CO_2 in N_2	99	< 0.1	< 1	< 0.1	< 1	1.8	0.21	1.0×10^2
Tolerances %	> 90 ..... ± 1 < 1 ..... ± 50					± 10		

points indicated. Samples from point A gave information on the $^{15}O_2$, $^{13}N_2$ (^{13}NN), $^{11}CO_2$, $C^{15}O_2$, $N_2{}^{15}O$, $C^{15}O$ and ^{11}CO, any $^{15}O_3$ (^{15}OOO) and $N^{15}O_2$ ($N^{15}OO$) being irreversibly adsorbed in the gas chromatograph. Two columns were used, a 30 cm × 4.8 mm, 80–100 mesh molecular sieve (type 5A) for the analysis of O_2, N_2 and CO and a 1.5 m × 4.8 mm, 80–100 mesh Porapak Q to separate

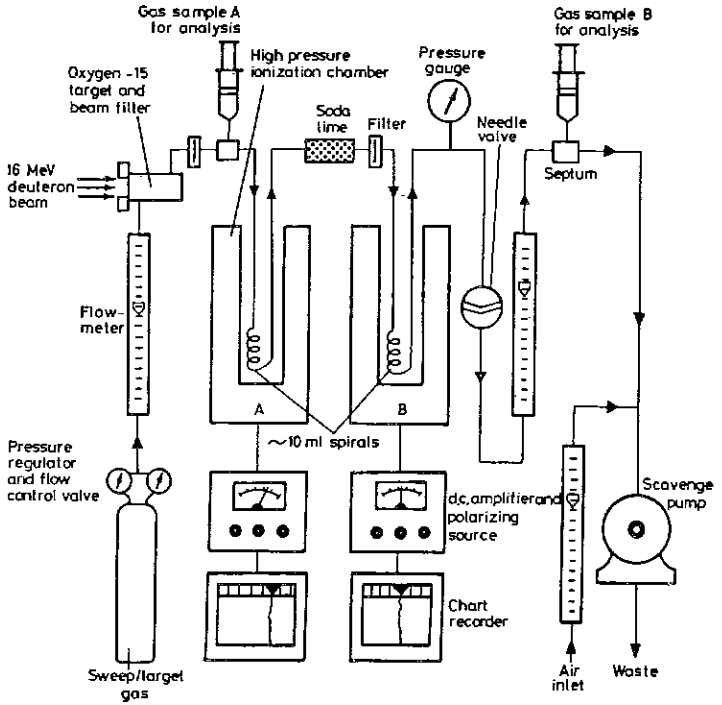

Figure 5.4 Gas flow system for the experimental production of ^{15}OO and $C^{15}OO$

O_2, N_2 and CO from CO_2 and N_2O at 50 °C. Samples from point B after the soda lime absorber gave confirmation that no $C^{15}O_2$ was escaping into the second spiral; also any $^{15}O_3$ decomposed by the soda lime[29] would be detected as an increase in the $^{15}O_2$ content. Any $N^{15}O_2$ present was also removed by the soda lime. Thus the difference in the ion chamber readings, after correction for sensitivity differences, gave information on the $C^{15}O_2$ and $N^{15}O_2$ removed, and the $^{15}O_3$ decomposed by the soda lime. Some difficulties however were experienced with activity of an unknown chemical form, possibly $N^{15}O_2$ adhering to the copper spiral in chamber A.

An estimate for a correction factor for chamber A reading was made by rapidly flushing out the nonreactive gas content of the spiral and observing the residual activity. This, after correcting for decay during flushing, was subtracted from the chamber A reading obtained under steady state activity and flow conditions. In order to check the validity of this approach a simplified circuit shown in

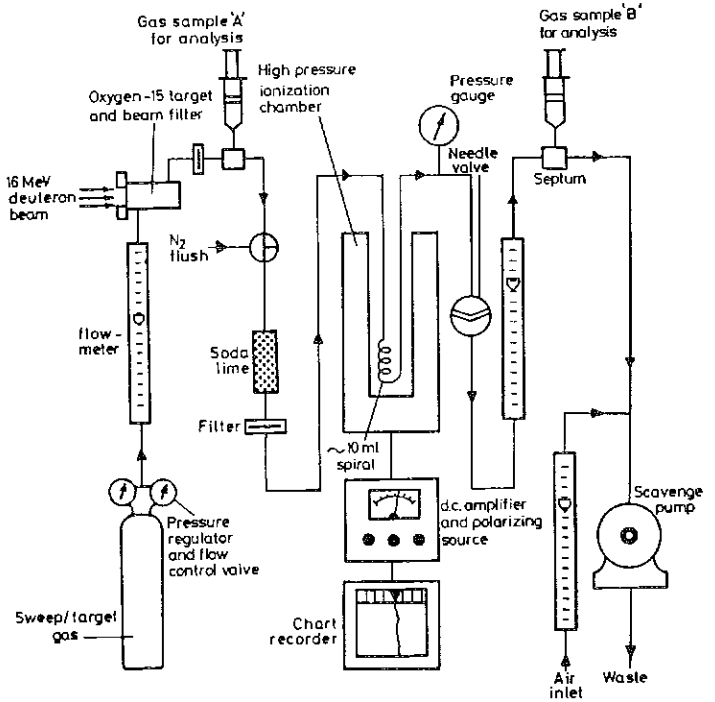

Figure 5.5 Simplified gas flow system for the experimental production of ^{15}OO

Figure 5.5 was set up. The total ^{15}O activity as $C^{15}O_2$ and $N^{15}O_2$ accumulated in the soda lime absorber in a set time was compared, after correction for decay during accumulation and flushing, with the rate of production of the products not affected by the soda lime. This method gave results in good agreement with the previous method. From Table 5.2 $N^{15}O_2$ and $^{15}O_3$ can be seen to be a problem only when pure N_2 is irradiated. However, the rate of ^{15}O recovery here is very low and as mentioned the composition was found to be very variable. NO_2 was also estimated colorimetrically using the Saltzman test[31], levels of ~0.1 per cent being found

in gas sample A when 4 per cent O_2 in N_2 was irradiated under the conditions shown in Table 5.2. The effect on the rate of production and target output composition of varying the beam current between 5 and 50 μA was also investigated for the 4 per cent O_2 in N_2 mixture. The results are shown in *Figure 5.6* and *Figure 5.7*. The $^{15}OO+N_2{}^{15}O$ recovery at the target output can be seen to be a linear function of the beam current. The $N_2{}^{15}O$ percentage can be seen to be at its greatest at the low beam currents and hence for a

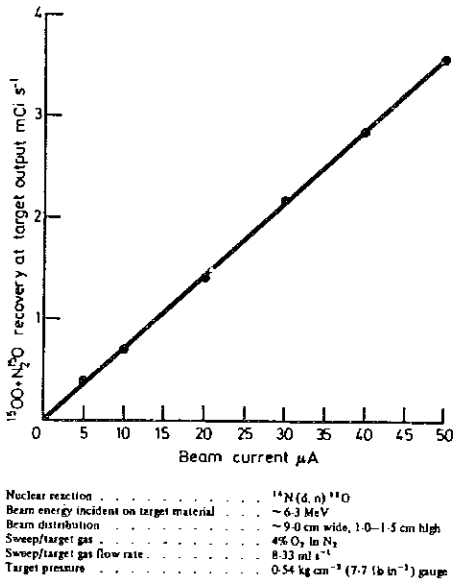

Figure 5.6 Oxygen-15 target used with a 4 per cent O_2 in N_2 sweep/target gas: $^{15}OO+N_2{}^{15}O$ recovery *versus* beam current

given beam distribution at relatively low radiation dose rates. At higher beam currents the $N_2{}^{15}O$ is reduced showing that although it is produced as a primary product, radiolysis causes its decomposition[1]. From Table 5.2 it can be seen that provided the small amount of O_2 carrier present is > 1 per cent, the recovery of $^{15}O_2$ from the target remains effectively constant. The reactivity of the ^{15}O atoms produced by the $^{14}N(d,n)^{15}O$ reaction towards O_2 to form $^{15}O_2$ as the product, rather than nitrogen oxygen compounds, can be seen to be high, the only nitrogen oxide observed in significant quantities being $N_2{}^{15}O$ although the losses of some $N^{15}O_2$ in the target and flow system cannot be ruled out. The 'hot

atom' and radiation chemical reactions taking place in the target are not fully understood at the present time. Information appears in the literature on the irradiation of N_2/O_2 mixtures[2] but there is little information on the reactions of energetic oxygen atoms. Most workers in the hot atom field however have indicated that hot atom effects can only be observed at very low radiation doses and as the radiation dose is usually quite high when isotope production is being carried out, most of the chemical effects within the target are

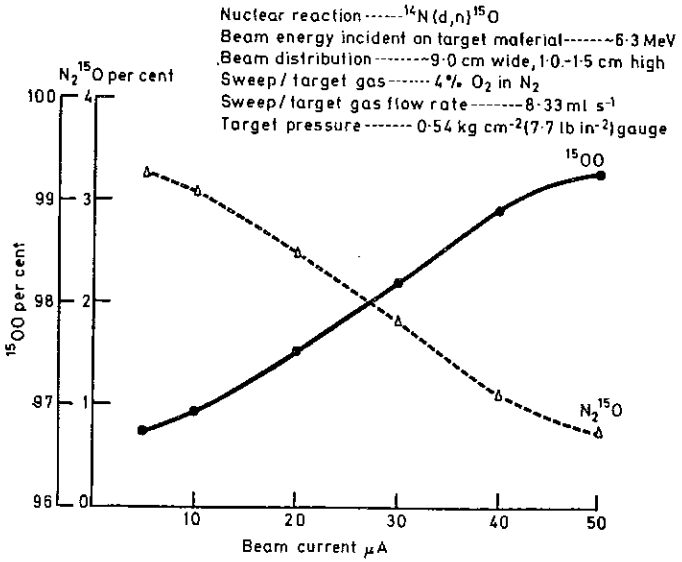

Figure 5.7 Oxygen-15 target used with a 4 per cent O_2 in N_2 sweep/target gas: Target output radioactive gas composition *versus* beam current

radiation induced. Thus N_2O, NO_2 and O_3 are all products that have been observed in radiation chemical investigations of N_2/O_2 mixtures. The CO_2 is most probably formed as the result of radiation induced oxidation of trace organic impurities in the target gas and on the target walls.

5.3.2 $C^{15}O_2$ Experimental Production

The classical preparation of CO_2 has been used for the preparation of $C^{15}O_2$ by the reaction of $^{15}O_2$ with heated carbon. Some difficulties were however encountered in achieving a high efficiency of conversion and in particular a rapid attainment of maximum

production rate necessary when rapid beam switching is used. The reactivity of the ^{15}O atoms produced from nitrogen towards CO_2 was therefore investigated as a direct means of $C^{15}O_2$ production. A range of CO_2 in N_2 mixtures was prepared including 0.25, 1, 2.5 and 5 per cent. These mixtures were irradiated with ~ 6.3 MeV deuterons in the gas flow circuit shown in *Figure 5.4*, care being taken to ensure that the soda lime absorber was not allowed to become exhausted by the CO_2 carrier. Samples for radio-gas chromatographic analysis were taken at the points indicated. The results are shown in Table 5.3. The main impurities present were $^{15}O_2$ which was apparently independent of the CO_2 concentration, and $^{13}N_2$ which increased as the CO_2 content increased due to the $^{12}C(d,n)^{13}N$ reaction being favoured by a higher carbon content in the target gas. No oxides of nitrogen other than a trace of $N_2{}^{15}O$ were detected either radio-gas chromatographically or colorimetrically using the Saltzman test. No adsorption problems were encountered with the Cu spiral in chamber A indicating that $N^{15}O_2$ is the most likely cause of the adsorption problem in the $^{15}O_2$ work. $^{15}O_3$ would not be expected to be found in the CO_2/N_2 system. The rate of production of $C^{15}O_2$ as shown in Table 5.3 is about 20 per cent lower than that for $^{15}O_2$. This difference has not been accounted for but the loss is assumed to be to the target walls. The relationship between beam current and production rate and target output composition was investigated for the 5 per cent CO_2 in N_2 mixture over the range 5 to 40 μA. The results are shown in *Figures 5.8* and *5.9*. The rate of production can be seen to be a linear function of beam current. The target output composition is more complex. As the beam current is increased the $C^{15}O_2$ percentage increases whilst the $^{15}O_2$ level falls.

The chemical reactions taking place in the target are thought to be largely as a result of the high radiation dose. Both nitrogen and CO_2 show no net change when irradiated. Although some radiation decomposition takes place, recombination is almost quantitative[3,4]. The radiation chemical properties of CO_2 have been studied extensively but although the simple overall process is represented stoichiometrically by

$$CO_2 \rightleftarrows CO + O$$

this simple equation apparently obscures a series of complex reactions which are inadequately understood[4]. The formation of $C^{15}O_2$ most probably is the result of preferential recombination of the excited ^{15}O atoms with the radiolytic CO

$$^{15}O^* + CO \rightarrow CO^{15}O$$

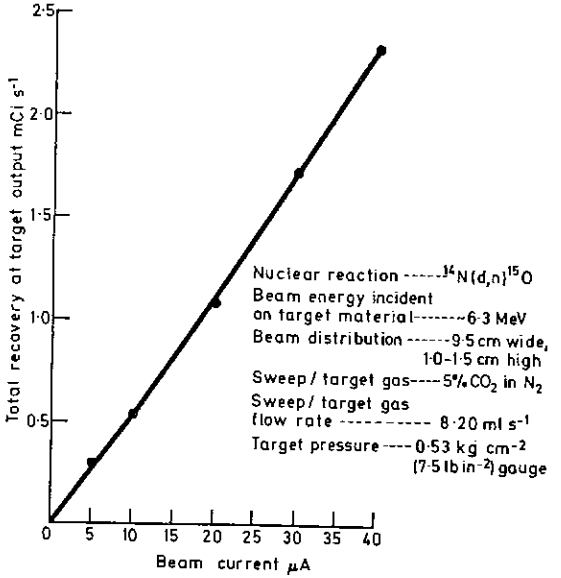

Figure 5.8 Oxygen-15 target used with a 5 per cent CO_2 in N_2 sweep/target gas: Total recovery *versus* beam current

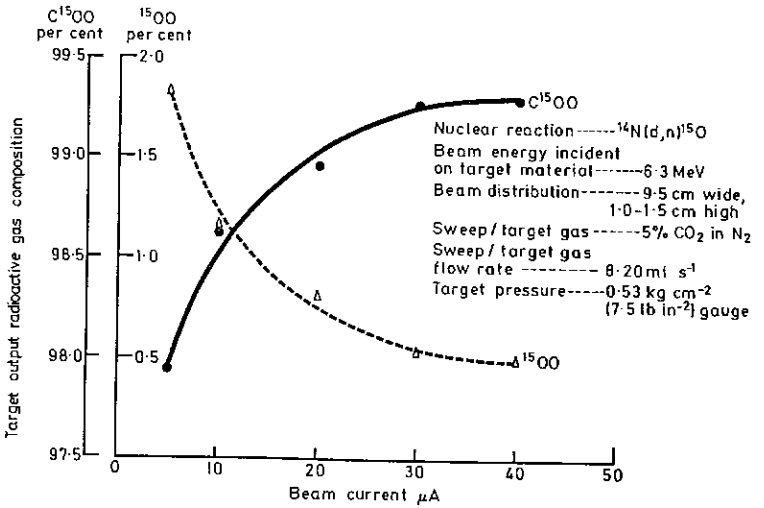

Figure 5.9 Oxygen-15 target used with a 5 per cent CO_2 in N_2 sweep/target gas: Target output radioactive gas composition *versus* beam current

5.4 ^{15}O PRODUCTION SYSTEMS

5.4.1 $^{15}O_2$ Production System

General Principle

This system is designed for the continuous production of $^{15}O_2$ (^{15}OO). The flow diagram which is of open circuit design is shown in *Figure 5.10.* A mixture of 4 per cent O_2 in N_2 is used as the combined target and sweep gas, the target pressure being maintained

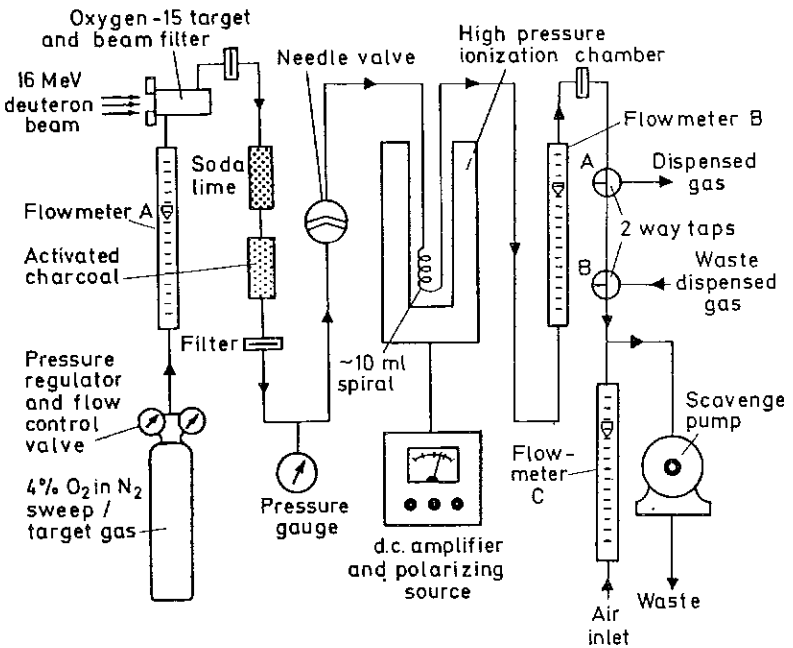

Figure 5.10 ^{15}OO production system using a 4 per cent O_2 in N_2 gas target

at about 0.54 kg cm^{-2} (7.7 lb in^{-2}) above atmospheric pressure. Bombardment is by a 30 μA 16 MeV deuteron beam degraded to approximately 6.3 MeV by the combined beam filter and target window. The $^{14}N(d,n)^{15}O$ reaction takes place, the product at the target output being $^{15}O_2$ with small percentages of $N_2{}^{15}O$, $N^{15}O_2$, $^{15}O_3$, and trace amounts of $C^{15}O_2$, $C^{15}O$ and $^{13}N_2$ present as contaminants; all but the $C^{15}O$ and $^{13}N_2$ are removed by soda lime and activated charcoal absorbers. The radioactive concentration at the system output may be reduced by diluting the system

output gas or by decreasing the beam current. The performance of the system is given in Table 5.4.

Flow Diagram Description

The gas passes through the system as shown in *Figure 5.10.* The target pressure and sweep gas flow rate are determined by the settings of the pressure regulator and flow control valve, and the needle valve. The target output gas is passed through soda lime to remove traces of $C^{15}O_2$, $N^{15}O_2$ and $^{15}O_3$, and activated charcoal to eliminate the $N_2{}^{15}O$ contaminant. A continuous indication of radioactive concentration is obtained by passing the gas through a copper measuring spiral having a volume of approximately 10 ml in a high pressure ionization chamber. The system output gas may be dispensed either batch-wise or continuously from tap A. If continuous dispensing is required the waste dispensed gas may be returned to the system using tap B. At this point an air inlet is introduced so that the scavenge pump will not affect the sweep gas flow rate in the rest of the system.

Target, Sweep/Target Gas and Irradiation Conditions

The target is of the type shown in *Figure 5.3* and described in section 5.2. The combined 0.7 mm aluminium beam filter and target window degrades the 16 MeV deuteron beam to approximately 6.3 MeV. A normal target working pressure is 0.54 kg cm^{-2} (7.7 lb in^{-2}) gauge. A sweep/target gas mixture of 4 per cent O_2 in N_2 is used at a flow rate of 8.3 ml s^{-1}. The irradiation conditions are given in Table 5.4.

Soda Lime and Activated Charcoal Absorbers

A soda lime absorber 16 cm long, 2.5 cm diameter is adequate for the removal of the $C^{15}O_2$ and $N^{15}O_2$ contaminants. The $^{15}O_3$ contaminant is decomposed in the soda lime to $^{15}O_2$. The soda lime absorber, the volume of which is not critical, is of the type shown in *Figure 3.6.* However, it is important that the activated charcoal absorber used for the removal of the $N_2{}^{15}O$ is not larger than necessary since this can result in a significant loss of $^{15}O_2$ activity also. A column 16 cm long, 2.5 cm diameter, at ambient temperature, is sufficient at the flow rate used.

Flowmeters and Filters

The flowmeters used in the system are of the variable area type. Since this type of flowmeter is pressure dependent the sweep gas flow rate is always determined from flowmeter B since this is virtually

TABLE 5.4

PERFORMANCE OF A ^{15}OO PRODUCTION SYSTEM USING A 4 PER CENT O_2 IN N_2 GAS TARGET

Particle	Deuteron
Nuclear reaction	$^{14}N(d,n)^{15}O$
Current	30 μA
Energy	16.1 MeV
Energy incident on target material	~ 6.3 MeV
Window material and thickness	Al 0.70 mm
Energy loss in window	~ 9.8 MeV
Beam distribution dimensions (see section 2.4)	2.0–2.5 cm wide, 1.0–1.5 cm high
Target dimensions	12.7 cm wide, 2.6 cm high, 25.5 cm deep. Gas vol. 842 ml at 760 mm Hg 20°C
Target pressure	0.54 kg cm^{-2} (7.7 lb in^{-2}) gauge
Sweep/target gas flow rate	8.33 ml s^{-1}
Target output to system output	~ 10 m

Sweep/target gas 4% O_2 in N_2	*Per cent of total recovered activity*						^{15}O *recovery*		
	^{15}OO	$N_2{}^{15}O$	$C^{15}OO$	$C^{15}O$	$N^{15}OO$ + ^{15}OOO	^{13}NN	mCi s^{-1}	mCi ml^{-1} 760 mm Hg 20°C	mCi mM^{-1} O_2 760 mm Hg 20°C
Target output	97	2.2	< 0.1	< 0.1	< 1	< 0.1	2.3	0.28	1.6×10^2
System output*	> 99	< 0.1	< 0.1	< 0.1	< 0.1	< 0.1	1.6	0.20	1.2×10^2
Tolerances %	> 90 ..... ± 1 < 10 ..... ± 15						± 10		

* Target output gas passed through column of soda lime 16 cm long and 2.5 cm diameter followed by a column of activated charcoal 16 cm long and 2.5 cm diameter at ambient temperature.

at atmosphericpressure. Flowmeter A reads low due to the elevated pressure at this point in the system. Flowmeters A and B have a range of 100–1000 ml min^{-1} (1.67–16.7 ml s^{-1}) (N_2) at 760 mm Hg and 18°C. The flow rate at the air inlet should not be less than about 100 times that in the rest of the system. Thus the range of the scavenging gas flowmeter C is 10–100 l min^{-1} (air) at 760 mm Hg and 18°C.

The filters are of the type described in section 3.3. If the gas is required for sterile use it is dispensed through a Millipore filter as described in section 4.1.3.

Gas Transmission Tubes

The system is connected with 2.2 mm diameter, 1.5 mm bore stainless steel tube. Where flexible connections are required, 3.2 mm diameter, 2.0 mm bore nylon tube is used. The distance from the target to the processing equipment is approximately 10 m. Longer distances of up to 100 m may be used provided the target pressure is maintained at 0.54 kg cm^{-2}. Unless a high sweep gas flow rate is maintained, there is inevitably a significant loss of activity due to decay in transit when long gas transmission tubes are used.

To maintain the measuring spiral and flowmeter B at approximately atmospheric pressure, long lengths (> 2 m) of small bore (1.5 mm) connecting tube between the spiral input and the dispensing point should be avoided.

Production Techniques and System Performance

Before bombardment the scavenge pump is started and air removed from the system by flushing for half an hour with the sweep gas flowing at about 8 ml s^{-1}. After flushing is complete and after checking the target pressure, sweep gas flow rate and yield monitor, the irradiation is started. As the temperature of the gas in the target increases during bombardment the target pressure increases and this may need readjusting using the needle valve. A steady state of output activity is reached about 6 min after the start of bombardment at the stated irradiation and flow rate conditions.

If it is necessary to increase the production rate at the system output, the beam current is increased (*Figure 5.6*). The amount of this increase is limited by the beam distribution since the beam filter will not withstand a concentrated high current beam. However, provided the beam is well spread it is possible to run at up to 45 or 50 μA with no adverse effects on the filter. To reduce the radioactive concentration of $^{15}O_2$ either the beam current may be reduced or the system output gas may be diluted on dispensing.

Since a relatively high target pressure and sweep gas flow rate are used the system is fairly sensitive to changes in beam current; such changes cause variations in the target pressure which are rapidly reflected as variations in the sweep gas flow rate and thus the rate of recovery of product nuclei. However, this is not usually a problem unless the beam current is severely fluctuating, and one does have the advantage that it is possible to obtain a usable yield in as little as 6 min from the start of bombardment, provided the system has been flushed out and the sweep gas is flowing. Thus when only short periods of $^{15}O_2$ production are required during a long clinical session it is convenient to leave the sweep gas flowing and use the cyclotron only when necessary. Such an arrangement can lead to a more economic use of cyclotron running time.

It will be seen from Table 5.4 that the radiochemical purity at the system output is in excess of 99 per cent $^{15}O_2$. The ^{15}O recovery at the system output is less than that at the target output due to decay in transit and the loss of some activity in the soda lime and activated charcoal absorbers, the specific activity also being reduced.

To avoid a premature rise in the contaminant level the soda lime and activated charcoal absorbers are regularly changed. Contaminants which are likely to affect clinical measurements are $C^{15}O_2$, $C^{15}O$ and $N_2{}^{15}O$. The trace amount of $^{13}N_2$ contaminant does not present a problem in most applications. Regular tests are made of the chemical and radiochemical composition of the system output gas using decay curve analyses, radio-gas chromatographic and colorimetric microdetermination techniques[31].

For systems where the irradiation parameters differ widely from those shown in Table 5.4, care should be taken to investigate the stability of the system output gas composition under all anticipated operating conditions.

5.4.2 $C^{15}O_2$ Production System

General Principle

This system is designed for the continuous production of $C^{15}O_2$ ($C^{15}OO$). The flow diagram which is of open circuit design is shown in *Figure 5.11*. A mixture of 2.5 per cent CO_2 in N_2 is used as the combined target and sweep gas, the target pressure being maintained at about 0.61 kg cm^{-2} (8.7 lb in^{-2}) above atmospheric pressure. Bombardment is by a 30 μA 16 MeV deuteron beam degraded to approximately 6.3 MeV by the combined beam filter and target window. The $^{14}N(d,n)^{15}O$ reaction takes place, the product at the target output being $C^{15}O_2$, with small percentages of $C^{15}O$, $^{15}O_2$,

$N_2{}^{15}O$ and $^{13}N_2$ present as contaminants; all but the $^{13}N_2$ are removed by activated charcoal at 400°C. The radioactive concentration at the system output may be reduced by diluting the system output gas or by decreasing the beam current. The performance of the system is given in Table 5.5.

Flow Diagram Description

The gas passes through the system as shown in *Figure 5.11*. The target pressure and sweep gas flow rate are determined by the

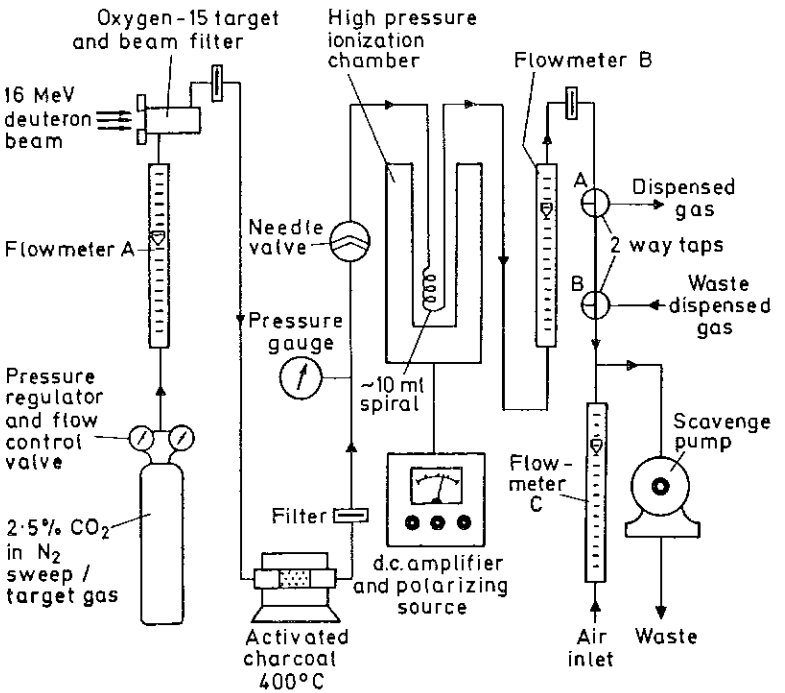

Figure 5.11 $C^{15}OO$ production system using a 2.5 per cent CO_2 in N_2 gas target

settings of the pressure regulator and flow control valve, and the needle valve. The target output gas is passed through a small activated charcoal furnace at 400°C to eliminate the $C^{15}O$, $^{15}O_2$ and $N_2{}^{15}O$ contaminants. A continuous indication of radioactive concentration is obtained by passing the gas through a copper measuring spiral having a volume of approximately 10 ml in a high pressure ionization chamber. The system output gas may be dispensed either batchwise or continuously from tap A. If continuous

TABLE 5.5

PERFORMANCE OF A $C^{15}OO$ PRODUCTION SYSTEM USING A 2.5 PER CENT CO_2 IN N_2 GAS TARGET

Particle	Deuteron
Nuclear reaction	$^{14}N(d,n)^{15}O$
Current	30 μA
Energy	16.1 MeV
Energy incident on target material	~ 6.3 MeV
Window material and thickness	Al 0.70 mm
Energy loss in window	~ 9.8 MeV
Beam distribution dimensions (see section 2.4)	2.0–2.5 cm wide, 1.0–1.5 cm high
Target dimensions	12.7 cm wide, 2.6 cm high, 25.5 cm deep. Gas vol. 842 ml at 760 mm Hg 20°C
Target pressure	0.61 kg cm^{-2} (8.7 lb in^{-2}) gauge
Sweep/target gas flow rate	8.33 ml s^{-1}
Target output to system output	~ 10 m

Sweep/target gas 2.5% CO_2 in N_2	Per cent of total recovered activity					^{15}O recovery	
	$C^{15}OO$	$C^{15}O$	^{15}OO	$N_2{}^{15}O$	^{13}NN	mCi s^{-1}	mCi ml^{-1} 760 mm Hg 20°C	mCi mM^{-1} CO_2 760 mm Hg 20°C
Target output	99	< 0.1	< 1	< 0.1	< 1	1.8	0.21	2.0×10^2
System output*	> 99	< 0.1	< 0.1	< 0.1	< 1	1.2	0.14	1.3×10^2
Tolerances %	> 90 ..... ± 1 < 1 ..... ± 15					± 10		

* Target output gas passed through activated charcoal column 8 cm long, 1.6 cm diameter at 400°C.

dispensing is required the waste dispensed gas may be returned to the system using tap B. At this point an air inlet is introduced so that the scavenge pump will not affect the sweep gas flow rate in the rest of the system.

Target, Sweep/Target Gas and Irradiation Conditions

The target is of the type shown in *Figure 5.3* and described in section 5.2 (page 126). The combined 0.7 mm aluminium beam filter and target window degrades the 16 MeV deuteron beam to approximately 6.3 MeV. A normal target working pressure is 0.61 kg cm^{-2} (8.7 lb in^{-2}) gauge. A sweep/target gas mixture of 2.5 per cent CO_2 in N_2 is used at a flow rate of 8.3 ml s^{-1}. The irradiation conditions are given in Table 5.5.

Activated Charcoal Furnace

Although the product at the target output is almost entirely in the form of $C^{15}O_2$, a small activated charcoal furnace is included in the system to remove traces of $C^{15}O$, $^{15}O_2$ and $N_2{}^{15}O$. A column of activated charcoal 7.8 cm long, 1.6 cm diameter in a silica tube at 400°C is sufficient at the flow rate used (see *Figure 3.5*). It is inadvisable to use more activated charcoal than necessary since some of the desired ^{15}O product nuclei are retained in this absorber. To avoid a loss of activity by decay the 'dead volume' of the silica tube should be kept to a minimum. (See section 3.5.1, page 68.)

Flowmeters and Filters

The flowmeters used in the system are of the variable area type. Since this type of flowmeter is pressure dependent the sweep gas flow rate is always determined from flowmeter B since this is virtually at atmospheric pressure. Flowmeter A reads low due to the elevated pressure at this point in the system. Flowmeters A and B have a range of 100–1000 ml min^{-1} (1.67–16.7 ml s^{-1}) (N_2) at 760 mm Hg and 18°C. The flow rate at the air inlet should not be less than about 100 times that in the rest of the system. Thus a useful range for the scavenging gas flowmeter C is 10–100 l min^{-1} (air) at 760 mm Hg and 18°C.

The filters are of the type described in section 3.3. If the gas is required for sterile use it is dispensed through a Millipore filter as described in section 4.1.3 (page 106).

Gas Transmission Tubes

The system is connected with 2.2 mm diameter, 1.5 mm bore stainless steel tube. Where flexible connections are required 3.2 mm

diameter, 2.0 mm bore nylon tube is used. The distance from the target to the processing equipment is approximately 10 m. Longer distances of up to 100 m may be used provided the target pressure is maintained at 0.61 kg cm^{-2}. Unless a high sweep gas flow rate is maintained, there is inevitably a significant loss of activity due to decay in transit when long gas transmission tubes are used.

To maintain the measuring spiral and flowmeter B at approximately atmospheric pressure, long lengths (> 2 m) of small bore (1.5 mm) connecting tube between the spiral input and the dispensing point should be avoided.

Production Techniques and System Performance

Before bombardment the scavenge pump is started and oxygen removed from the system by flushing for half an hour with the sweep gas flowing at about 16 ml s^{-1}. This is done with the activated charcoal at ambient temperature (or by-passed) to prevent the rapid exhaustion of this reagent by purged air. After flushing is complete and after checking the target pressure, sweep gas flow rate, activated charcoal furnace and yield monitor, the irradiation is started. As the temperature of the gas in the target increases during bombardment the target pressure increases and may need readjusting using the needle valve. A steady state of output activity is reached about 6 min after the start of bombardment at the stated irradiation and flow rate conditions.

If it is necessary to increase the production rate at the system output the beam current is increased (*Figure 5.8*). The amount of this increase is limited by the beam distribution since the beam filter will not withstand a concentrated high current beam. However, provided the beam is well spread it is possible to run at up to 50 μA with no adverse effects on the filter. To reduce the radioactive concentration of $C^{15}O_2$ either the beam current may be reduced or the system output gas may be diluted on dispensing.

Since a relatively high target pressure and sweep gas flow rate are used the system is fairly sensitive to changes in beam current; such changes cause variations in the target pressure which are rapidly reflected as variations in the sweep gas flow rate and thus the rate of recovery of product nuclei. However, this is not usually a problem unless the beam current is severely fluctuating, and one does have the advantage that it is possible to obtain a usable yield in as little as 6 min from the start of bombardment, provided the system has been flushed out and the sweep gas is flowing. Thus when only short periods of $C^{15}O_2$ production are required during a long clinical session it is convenient to leave the sweep gas flowing and use the

cyclotron only when necessary. Such an arrangement can lead to a more economic use of cyclotron running time.

It will be seen from Table 5.5 that the radiochemical purity at the system output is in excess of 99 per cent $C^{15}O_2$. The ^{15}O recovery at the system output is less than that at the target ouput due to decay in transit and the loss of some activity in the activated charcoal furnace; the specific activity is also reduced.

After prolonged use the heated activated charcoal is reduced in volume as it reacts with trace oxygen in the system. Thus this reagent is regularly inspected and if necessary replenished. Contaminants which are likely to affect clinical measurements are $^{15}O_2$, $C^{15}O$ and $N_2{}^{15}O$. The small amount of $^{13}N_2$ contaminant does not present a problem in most applications. Regular tests are made of the system output gas using decay curve analyses and radio-gas chromatographic techniques.

For systems where the irradiation parameters differ widely from those shown in Table 5.5, care should be taken to investigate the stability of the system output gas composition under all anticipated operating conditions.

5.4.3 $C^{15}O$ Production System

General Principle

This system is designed for the continuous production of $C^{15}O$. The flow diagram which is of open circuit design is shown in *Figure 5.12*. A mixture of 2 per cent O_2 in N_2 is used as the combined target and sweep gas, the target pressure being maintained at about 0.54 kg cm^{-2} (7.7 lb in^{-2}) above atmospheric pressure. Bombardment is by a 30 μA 16 MeV deuteron beam degraded to approximately 6.3 MeV by the combined beam filter and target window. The $^{14}N(d,n)^{15}O$ reaction takes place, the product at the target output being $^{15}O_2$, which is converted to $C^{15}O$ by activated charcoal at 900°C which also removes the $N_2{}^{15}O$, $N^{15}O_2$ and $^{15}O_3$ contaminants. $^{13}N_2$ is present at the target output only in trace amounts. Trace $C^{15}O_2$ at the furnace output is removed by a soda lime absorber. The radioactive concentration at the system output may be reduced by diluting the system output gas or by decreasing the beam current. The performance of the system is given in Table 5.6.

Flow Diagram Description

The gas passes through the system as shown in *Figure 5.12*. The target pressure and sweep gas flow rate are determined by the settings of the pressure regulator and flow control valve, and the needle valve.

The target output gas is passed through a small activated charcoal furnace at 900°C to convert the $^{15}O_2$ to $C^{15}O$ and then through soda lime to remove any traces of $C^{15}O_2$. A continuous indication of radioactive concentration is obtained by passing the gas through a copper measuring spiral having a volume of approximately 10 ml in a high pressure ionization chamber. The system output gas may be dispensed either batch-wise or continuously from tap A. If continuous dispensing is required the waste dispensed gas may be returned to the system using tap B. At this point an air inlet is

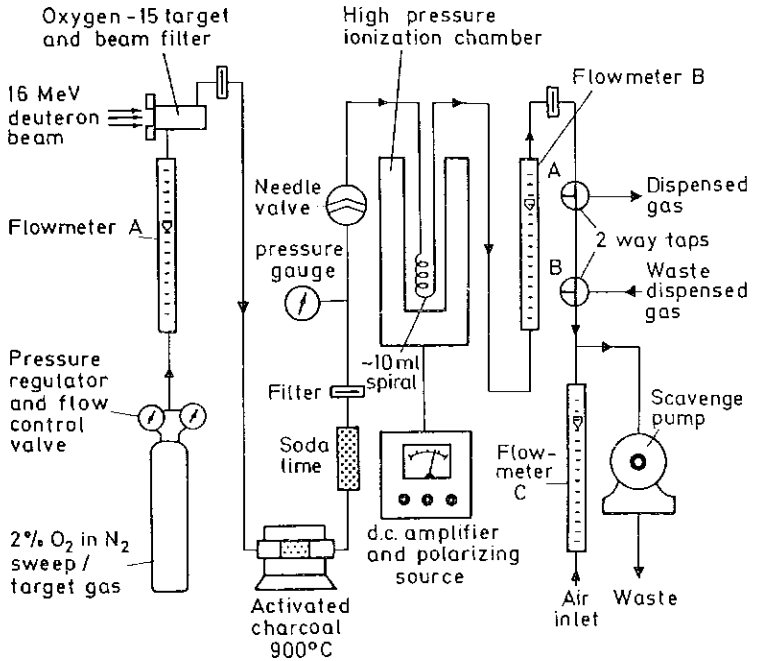

Figure 5.12 $C^{15}O$ production system using a 2 per cent O_2 in N_2 gas target

introduced so that the scavenge pump will not affect the sweep gas flow rate in the rest of the system.

Target, Sweep/Target Gas and Irradiation Conditions

The target is of the type shown in *Figure 5.3* and described in section 5.2. The combined 0.7 mm aluminium beam filter and target window degrades the 16 MeV deuteron beam to approximately 6.3 MeV. A normal target working pressure is 0.54 kg cm^{-2} (7.7 lb in^{-2}) gauge. A sweep gas mixture of 2 per cent O_2 in N_2 is used

TABLE 5.6

PERFORMANCE OF A $C^{15}O$ PRODUCTION SYSTEM USING A 2 PER CENT O_2 IN N_2 GAS TARGET

Particle	Deuteron
Nuclear reaction	$^{14}N(d,n)^{15}O$
Current	30 μA
Energy	16.1 MeV
Energy incident on target material	~ 6.3 MeV
Window material and thickness	Al 0.70 mm
Energy loss in window	~ 9.8 MeV
Beam distribution dimensions (see section 2.4)	2.0–2.5 cm wide, 1.0–1.5 cm high
Target dimensions	12.7 cm wide, 2.6 cm high, 25.5 cm deep. Gas vol. 842 ml at 760 mm Hg 20°C
Target pressure	0.54 kg cm^{-2} (7.7 lb in^{-2}) gauge
Sweep/target gas flow rate	8.33 ml s^{-1}
Target output to system output	~ 10 m

	Per cent of total recovered activity							*^{15}O recovery*		
Sweep/target gas 2% O_2 in N_2	$C^{15}O$	$C^{15}OO$	^{15}OO	$N_2{}^{15}O$	$N^{15}OO$ + ^{15}OOO	^{13}NN	mCi s^{-1}	mCi ml^{-1} 760 mm Hg 20°C	mCi mM^{-1} CO 760 mm Hg 20°C
Target output	< 0.1	< 1	96	2.9	< 1	< 0.1	2.3	0.28	N.A.*
System output†	> 99	< 0.1	< 0.1	< 0.1	< 0.1	< 0.1	1.2	0.14	72
Tolerances %	> 90 ..... ± 1 < 10 ..... ± 15							± 10	

* Not applicable.
† Target output gas passed through column of activated charcoal 8 cm long, 1.6 cm diameter at 900°C followed by a soda lime column 16 cm long and 2.5 cm diameter.

at a flow rate of 8.3 ml s^{-1}. The irradiation conditions are given in Table 5.6.

Activated Charcoal Furnace and Soda Lime Absorber

The activated charcoal converts the $^{15}O_2$ to $C^{15}O$ by the following reaction

$$2C + O_2 \xrightarrow{900\,^\circ C} 2\,CO$$

$$(2\%\ O_2 \text{ in } N_2) \qquad (4\%\ CO \text{ in } N_2)$$

This reagent also removes the $N_2{}^{15}O$, $N^{15}O_2$ and $^{15}O_3$ contaminants in the target output gas. Since some of the desired ^{15}O product nuclei are also retained by the activated charcoal its volume should not be greater than necessary. A column 8 cm long, 1.6 cm diameter in a silica tube at 900 °C is sufficient at a flow rate of 8.3 ml s^{-1} (see *Figure 3.5* and section 3.5.1, page 67). To avoid a loss of activity by decay the 'dead volume' of the silica tube should be kept to a minimum. To avoid premature exhaustion, the activated charcoal is changed after about 10 hours' use.

It is of interest to note that when activated charcoal at 900 °C is used the composition at the furnace output is 99.6 per cent $C^{15}O$ and 0.4 per cent $C^{15}O_2$. If, however, crushed graphite at 900 °C is used instead of activated charcoal, the output gas composition changes to 20 per cent $C^{15}O$ and 80 per cent $C^{15}O_2$. Hence the use of activated charcoal.

The soda lime absorber removes the small percentage of $C^{15}O_2$ present in the furnace output gas. Its volume is not critical, a column 16 cm long, 2.5 cm diameter being adequate. A typical absorber of this type is shown in *Figure 3.6*.

Flowmeters and Filters

The flowmeters used in the system are of the variable area type. Since this type of flowmeter is pressure dependent the sweep gas flow rate is always determined from flowmeter B since this is virtually at atmospheric pressure. Flowmeter A reads low due to the elevated pressure at this point in the system. Flowmeters A and B have a range of 100–1000 ml min^{-1} (1.67–16.7 ml s^{-1}) (N_2) at 760 mm Hg and 18 °C. The flow rate at the air inlet should not be less than about 100 times that in the rest of the system. Thus a useful range for the scavenging gas flowmeter C is 10–100 l min^{-1} (air) at 760 mm Hg and 18 °C.

The filters are of the type described in section 3.3. If the gas is required for sterile use it is dispensed through a Millipore filter as described in section 4.1.3.

Gas Transmission Tubes

The system is connected with 2.2 mm diameter, 1.5 mm bore stainless steel tube. Where flexible connections are required 3.2 mm diameter, 2.0 mm bore nylon tube is used. The distance from the target to the processing equipment is approximately 10 m. Longer distances of up to 100 m may be used provided the target pressure is maintained at 0.54 kg cm^{-2}. Unless a high sweep gas flow rate is maintained there is inevitably a significant loss of activity due to decay in transit when long gas transmission tubes are used.

To maintain the measuring spiral and flowmeter B at approximately atmospheric pressure, long lengths (> 2 m) of small bore (1.5 mm) connecting tube between the spiral input and the dispensing point should be avoided.

Production Techniques and System Performance

Before bombardment the scavenge pump is started and air removed from the system by flushing for half an hour with the sweep gas flowing at about 8 ml s^{-1}. This is done with the activated charcoal at ambient temperature (or by-passed) to prevent the rapid exhaustion of this reagent. After flushing is complete and after checking the target pressure, sweep gas flow rate, activated charcoal furnace and yield monitor, the irradiation is started. As the temperature of the gas in the target increases during bombardment the target pressure increases and may need readjusting using the needle valve. A steady state of output activity is reached about 6 min after the start of bombardment at the stated irradiation and flow rate conditions.

If it is necessary to increase the production rate of the radioactive gas at the system output, the beam current is increased (*Figure 5.6*). The amount of this increase is limited by the beam distribution since the beam filter will not withstand a concentrated high current beam. However, provided the beam is well spread it is possible to run at up to 45 or 50 μA with no adverse effects on the filter. To reduce the radioactive concentration of $C^{15}O$ either the beam current may be reduced or the system output gas may be diluted on dispensing.

Since a relatively high target pressure and sweep gas flow rate are used the system is fairly sensitive to changes in beam current; such changes cause variations in the target pressure which are rapidly reflected as variations in the sweep gas flow rate. However, this is not usually a problem unless the beam current is severely fluctuating.

It will be seen from Table 5.6 that the radiochemical purity at the system output is in excess of 99 per cent $C^{15}O$. The ^{15}O recovery

at the system output is less than that at the target output due to the loss of some activity in the activated charcoal furnace.

To avoid a premature rise in the contaminant level the activated charcoal furnace filling and soda lime absorber are regularly changed. Contaminants which are likely to affect clinical measurements are $C^{15}O_2$ and $^{15}O_2$. The trace amount of $^{13}N_2$ contaminant does not present a problem in most applications. Regular tests are made of the chemical and radiochemical composition of the system output gas using decay curve analyses and radio-gas chromatography.

For systems where the irradiation parameters differ widely from those shown in Table 5.6, care should be taken to investigate the stability of the system output gas composition under all anticipated operating conditions.

5.4.4 $H_2{}^{15}O$ Production System

General Principle

This system is designed for the batchwise production of $H_2{}^{15}O$. The flow diagram which is of open circuit design is shown in *Figure 5.13*. A mixture of 1–4 per cent O_2 in N_2 is used as the combined target and sweep gas, the target pressure being maintained at about 0.52 kg cm^{-2} (7.4 lb in^{-2}) above atmospheric pressure. Bombardment is by a 30 μA 16 MeV deuteron beam degraded to approximately 6.3 MeV by the combined filter and target window. The $^{14}N(d,n)^{15}O$ reaction takes place, the product at the target output being $^{15}O_2$ with small percentages of $N_2{}^{15}O$, $C^{15}O_2$, $N^{15}O_2$, $^{15}O_3$, $C^{15}O$ and $^{13}N_2$ present as contaminants; all but the $C^{15}O$ and $^{13}N_2$ are removed by soda lime and activated charcoal absorbers. The $^{15}O_2$ is combined with H_2 over a heated palladium catalyst to form $H_2{}^{15}O$ of high specific activity which is mixed with 1–2 ml of H_2O or physiological saline solution. The performance of the system is shown in *Figure 5.14*.

Flow Diagram Description

The gas passes through the system as shown in *Figure 5.13*. The target pressure and sweep gas flow rate are determined by the settings of pressure regulator and flow control valve A, and needle valve A. The target output gas is passed through soda lime to remove traces of $C^{15}O_2$, $N^{15}O_2$ and $^{15}O_3$, and activated charcoal to eliminate the $N_2{}^{15}O$ contaminant. A continuous indication of radioactive concentration is obtained by passing the gas through a copper measuring

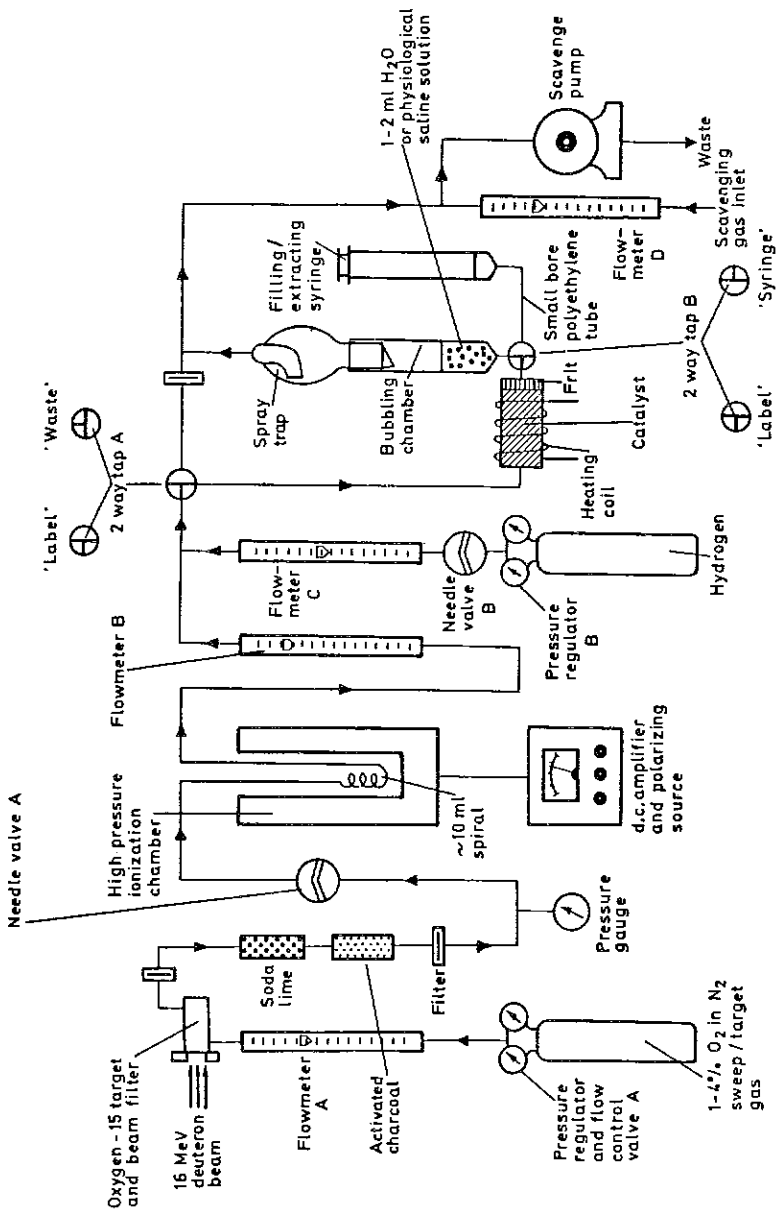

Figure 5.13 $H_2{}^{15}O$ production system using a 1–4 per cent O_2 in N_2 gas target

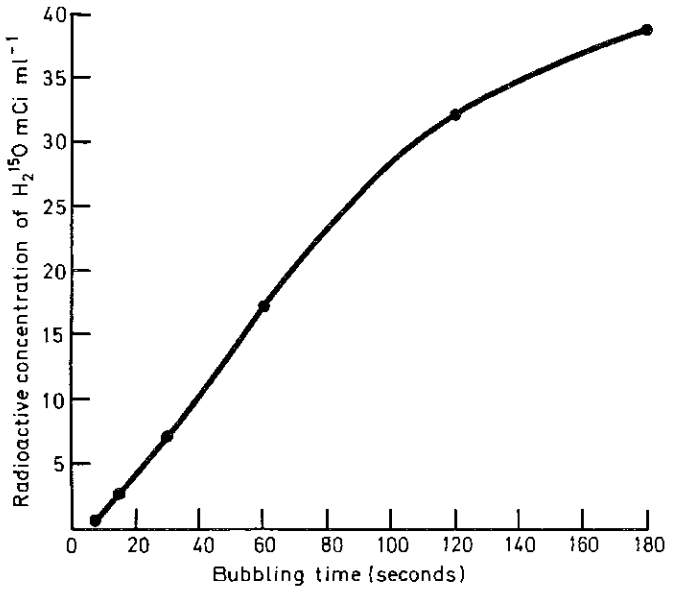

Figure 5.14 Performance of a $H_2{}^{15}O$ production system using a 4 per cent O_2 in N_2 gas target

Particle	Deuteron
Nuclear reaction	$^{14}N(d,n)^{15}O$
Current	30 μA
Energy	16.1 MeV
Energy incident on target material	~ 6.3 MeV
Window material and thickness	Al 0.70 mm
Energy loss in window	~ 9.8 MeV
Beam distribution dimensions*	~ 7.5 cm wide, 1.0-1.5 cm high
Target dimensions	12.7 cm wide, 2.6 cm high, 25.5 cm deep. Gas volume 842 ml at 760 mm Hg 20°C
Target pressure	0.52 kg cm^{-2} (7.4 lb in^{-2}) gauge
Sweep/target gas flow rate	8.3 ml s^{-1}
Sweep/target gas composition	4% O_2 in N_2
Hydrogen flow rate	~ 4 ml s^{-1}
Steady state $^{15}O_2$ production at catalyst	~ 1.6 mCi s^{-1} ~ 0.20 mCi ml^{-1} 760 mm Hg 20°C ~ 120 mCi mM^{-1} O_2 760 mm Hg 20°C
Catalyst temperature	146°C
Volume of water in bubbling chamber	2 ml
Maximum ^{15}O specific activity in water	0.70 mCi mM^{-1} H_2O
Maximum total ^{15}O activity in water	78 mCi in 2 ml
Target output to system output	~ 10 m

* See section 2.4.

spiral having a volume of about 10 ml in a high pressure ionization chamber.

After passing through flowmeter B the target output gas is passed to a 'T junction' where it is mixed with hydrogen. From this point the two-way tap A directs the gas mixture either directly to waste or over a heated catalyst which combusts it to $H_2{}^{15}O$ vapour of high specific activity. This vapour is swept (by the N_2 and excess H_2) into the bubbling chamber where it is mixed with 1–2 ml of H_2O or physiological saline solution. On leaving the bubbling chamber the gas passes to waste. At this point a scavenging gas inlet is introduced so that the scavenge pump will not affect the sweep gas flow rate. After a suitable mixing time the two-way tap A is turned to waste and the contents of the bubbling chamber are extracted into the syringe.

Scavenging Gas

Since hydrogen is present in the system the choice of scavenging gas is important. Air may be used, provided the waste gas composition is well below the explosive limit for an air/hydrogen mixture[12]. (See section 9.3.1, page 316 and section 9.3.2, page 318.) This necessitates a scavenging gas flow rate of not less than 10 l min^{-1}. In practice, a good scavenging gas flow rate is 50 l min^{-1}. Large volumes, other than the shielded scavenging gas tank (see *Figure 3.16*), should be avoided in the system between the scavenging gas inlet and the point of release into the atmosphere. A good alternative scavenging gas is nitrogen which may be supplied from a cylinder as shown in *Figure 7.10*.

Target, Sweep/Target Gas and Irradiation Conditions

The target is of the type shown in *Figure 5.3* and described in section 5.2. The combined 0.7 mm aluminium beam filter and target window degrades the 16 MeV deuteron beam to approximately 6.3 MeV. A normal target working pressure is 0.52 kg cm^{-2} (7.4 lb in^{-2}) gauge. Any sweep/target gas mixture of between 1 and 4 per cent O_2 in N_2 may be used at a target flow rate of about 8 ml s^{-1}. Typical irradiation conditions are given in *Figure 5.14*.

Hydrogen Supply

Commercial grade hydrogen (99.9 per cent) is used, the flow rate being determined by the settings of pressure regulator B and needle valve B. The actual flow rate required is determined by the sweep gas flow rate and the oxygen concentration. For example, if 1 per cent O_2 in N_2 is being used at 8 ml s^{-1}, the volume of oxygen

flowing is 0.08 ml s^{-1}. Thus the minimum flow rate of hydrogen required for H_2O production is 0.16 ml s^{-1}. In practice it is advisable to provide an excess of about 50 per cent to ensure complete combustion. Thus a hydrogen flow rate of about 0.25 ml s^{-1} is required for a 1 per cent O_2 in N_2 mixture. Similarly a 4 per cent O_2 in N_2 sweep gas flowing at 8 ml s^{-1} requires about 1 ml s^{-1} of hydrogen.

When unstable beam currents are encountered it is desirable to increase the excess hydrogen flow rate to allow for the resulting fluctuations in the sweep gas flow rate.

Soda Lime and Activated Charcoal Absorbers

A soda lime absorber 16 cm long, 2.5 cm diameter is sufficient for the removal of the $C^{15}O_2$ and $N^{15}O_2$ contaminants. The $^{15}O_3$ contaminant is decomposed in the soda lime to $^{15}O_2$. The soda lime absorber, the volume of which is not critical, may be of the type shown in *Figure 3.6*. However, it is important that the activated charcoal absorber used for the removal of $N_2{}^{15}O$ is not larger than necessary since this can result in a significant loss of $^{15}O_2$ activity also. A column 16 cm long, 2.5 cm diameter, at ambient temperature is adequate at the flow rate used.

Flowmeters and Filters

The flowmeters used in the system are of the variable area type. Since this type of flowmeter is pressure dependent the sweep gas flow rate is always determined from flowmeter B since this is virtually at atmospheric pressure. Flowmeter A reads low because of the elevated pressure at this point in the system. Flowmeters A and B have a range of 100–1000 ml min^{-1} (1.67–16.7 ml s^{-1}) (N_2) at 760 mm Hg and 18 °C. The hydrogen supply flowmeter C has a range of 5 to 150 ml min^{-1} (0.083–2.5 ml s^{-1}) (H_2) at 760 mm Hg and 18 °C. The range of the scavenging gas flowmeter D is 10–100 l min^{-1} at 760 mm Hg and 18 °C.

The gas line filters are of the type described in section 3.3. The filter used at the output of the catalyst column consists of a porosity 3 sintered glass frit. When $H_2{}^{15}O$ or labelled saline solution is required for sterile use it is dispensed through a Millipore filter.

Gas Transmission Tubes

The system is connected with 2.2 mm diameter, 1.5 mm bore stainless steel tube. Where flexible connections are required 3.2 mm diameter, 2.0 mm bore nylon tube is used. The distance from the target to the processing equipment is approximately 10 m. Longer

distances of up to 100 m may be used, provided the target pressure is maintained at 0.52 kg cm^{-2}. Unless a high sweep gas flow rate is maintained there is inevitably a significant loss of activity due to decay in transit when long gas transmission tubes are used.

Catalyst and Bubbling Chamber

The catalyst consists of a 6.5 cm long, 1.1 cm diameter column of Deoxo palladium-coated alumina pellets* heated to about 150 °C. The pellets are packed into a Pyrex glass tube with a sintered glass filter at the output, the tube being mounted in an aluminium block containing a heating element and a thermometer. Temperature control is by an energy regulator.

The bubbling chamber is a vertical pyrex glass tube 2 cm diameter, 7 cm high, which contains the water or saline solution to be labelled. A spray trap is fitted at the top of the tube to prevent spray escaping from the system.

The catalyst and bubbling chamber are closely positioned since the $H_2{}^{15}O$ water vapour must not be allowed to condense until it reaches the water or saline solution to be labelled. The junction consists of a high temperature two-way tap. A short length of small bore polyethylene tube connects the filling/extracting syringe to the two-way tap. The whole assembly is readily demountable to facilitate maintenance.

Production Techniques and System Performance

Before bombardment the catalyst heater is switched on and the temperature allowed to reach a value between 140 and 150 °C. Two-way tap A is turned to its 'waste' position. The scavenge pump is started (the nitrogen scavenging gas being turned on if this is used) and air removed from the system by flushing for half an hour with the sweep gas flowing at about 8 ml s^{-1}. After flushing, the target pressure and sweep gas flow rate are set to 0.52 kg cm^{-2} and 8.3 ml s^{-1} respectively, the hydrogen flow rate being set to a value approximately 50 per cent greater than that required for H_2O production with a given O_2/N_2 sweep gas mixture. The H_2O or physiological saline solution to be labelled is introduced into the bubbling chamber, care being taken to leave two-way tap B in the 'syringe' position to prevent liquid from entering the catalyst. After checking the yield monitor the irradiation is started. A steady state of output activity is reached about 6 min after the start of bombardment at the irradiation and flow rate conditions stated in *Figure 5.14*.

* Deoxo Model D ~ 3 mm long × ~ 3 mm diameter. Supplied by Engelhard Industries.

Labelling is carried out by first turning tap A and then tap B to their 'label' positions, the gas being allowed to pass over the catalyst and bubble through the H_2O or saline solution for sufficient time to produce the desired radioactive concentration. After labelling, tap B is first turned to 'syringe' and then tap A to 'waste', after which the contents of the bubbling chamber are extracted into the syringe.

It will be seen from *Figure 5.14* that the radioactive concentration reaches almost 40 mCi ml^{-1} after 180 s bubbling time. An equilibrium condition is reached when the activity in the H_2O or saline solution is decaying at a rate equivalent to the radioactive gas production, extraction and processing rate. It is inadvisable to bubble for more than 180 s since evaporation losses become significant. This is particularly noticeable when one is dealing with volumes of less than 1 ml. The authors have found that 0.75 ml is the minimum volume which may be labelled and extracted without difficulty. To prevent evaporation losses by prolonged bubbling it is clearly preferable to use a relatively high beam current and a short bubbling time, rather than the reverse. However, if low radioactive concentrations are required it is possible to use a beam current lower than 30 μA since the activated charcoal absorber is quite capable of coping with the increase in $N_2{}^{15}O$ production (*Figure 5.7*). As a precautionary measure the soda lime and activated charcoal absorbers are regularly changed.

Quality control procedures are necessary, especially if the labelled H_2O or saline solutions are to be used in humans. Specimens are regularly checked for their pyrogenicity and the presence of both stable and radioactive contaminants. A possible stable contaminant is NH_3 produced by the catalytic combination of hydrogen and the nitrogen in the sweep gas. Trace levels of NH_3 were estimated colorimetrically using the Nessler method[8]. NH_3 levels found in production samples were not greater than approximately 3 parts per million.

The presence of any long-lived contaminants in labelled samples of H_2O or saline solution is observed by decay curve analysis. A radiochemical purity in excess of 99.99 per cent is typical. (The trace amount of $^{13}N_2$ does not present a problem as its solubility in water is negligible.) In addition, regular tests are made of the chemical and radiochemical composition of the $H_2{}^{15}O$ using radio-gas chromatography.

For systems where the irradiation parameters differ widely from those shown in *Figure 5.14*, care should be taken to investigate the stability of the system output gas composition and also the com-

position of labelled samples of H_2O or saline solutions, under all anticipated operating conditions.

5.4.5 $^{15}O_2$ Red Cell Labelling System

General Principle

This system is designed for the batchwise labelling of red cells with $^{15}O_2$. The flow diagram which is of open circuit design is shown in *Figure 5.15*. A mixture of 2–4 per cent O_2 in N_2 is used as the combined target and sweep gas, the target pressure being maintained at about 0.54 kg cm^{-2} (7.7 lb in^{-2}) above atmospheric pressure. Bombardment is by a 30 μA 16 MeV deuteron beam degraded to approximately 6.3 MeV by the combined filter and target window. The $^{14}N(d,n)^{15}O$ reaction takes place, the product at the target output being $^{15}O_2$ with small percentages of $N_2{}^{15}O$, $C^{15}O_2$, $N^{15}O_2$, $^{15}O_3$, $C^{15}O$ and $^{13}N_2$ present as contaminants; all but the $C^{15}O$ and $^{13}N_2$ are removed by soda lime and activated charcoal absorbers. After Millipore filtration, a small proportion of the processed target output gas is bubbled slowly through 2–5 ml of whole blood, the remainder being shunted to waste. The performance of the system is shown in *Figure 5.16*.

Flow Diagram Description

The gas passes through the system as shown in *Figure 5.15*. The target pressure and sweep gas flow rate are determined by the settings of the pressure regulator and flow control valve and needle valve A. The target output gas is passed through soda lime to remove traces of $C^{15}O_2$, $N^{15}O_2$ and $^{15}O_3$, and activated charcoal to eliminate the $N_2{}^{15}O$ contaminant. A continuous indication of radioactive concentration is obtained by passing the gas through a copper measuring spiral having a volume of about 10 ml in a high pressure ionization chamber.

After passing through flowmeter B the target output gas is passed to two-way tap A which directs it either directly to waste, or to the by-pass needle valve B and the sterile assembly and hence through the blood. On leaving the bubbling chamber the gas passes to waste. At this point an air inlet is introduced so that the scavenge pump will not affect the sweep gas flow rate. After a suitable mixing time the blood is extracted into the syringe.

Target, Sweep/Target Gas and Irradiation Conditions

The target is of the type shown in *Figure 5.3* and described in section 5.2. The combined 0.7 mm aluminium beam filter and target

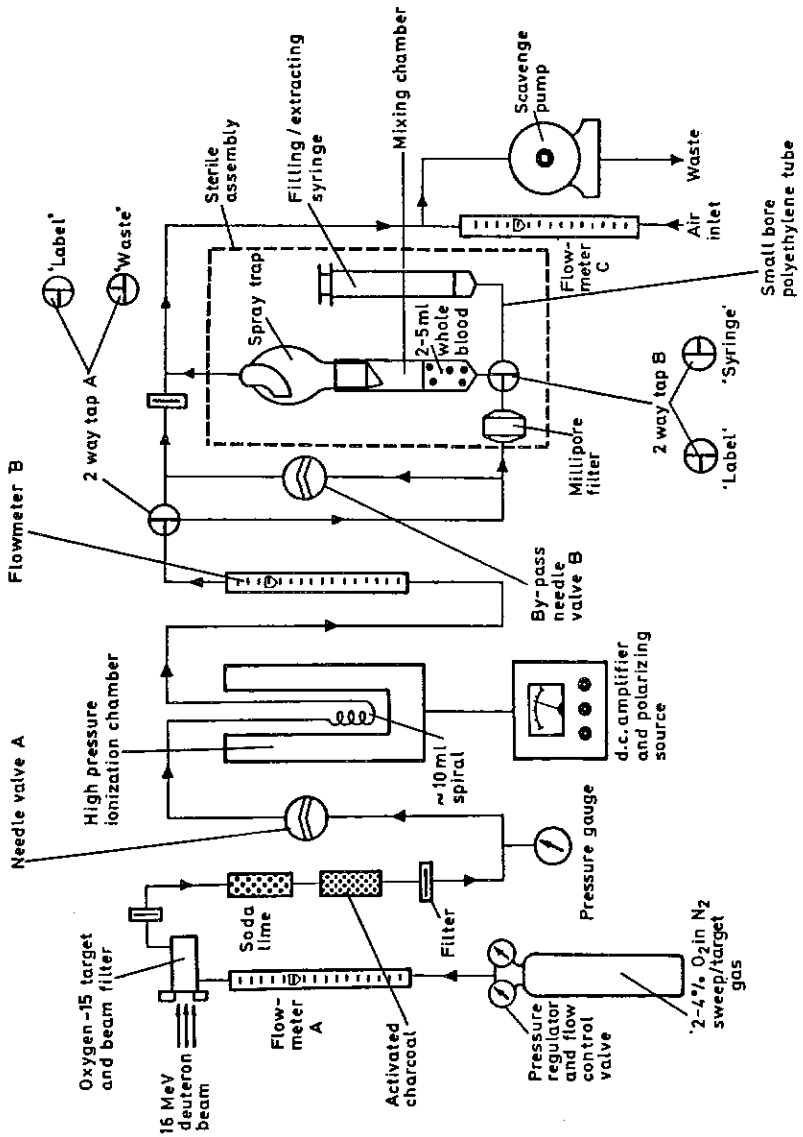

Figure 5.15 ^{15}OO red cell labelling system using a 2–4 per cent O_2 in N_2 gas target

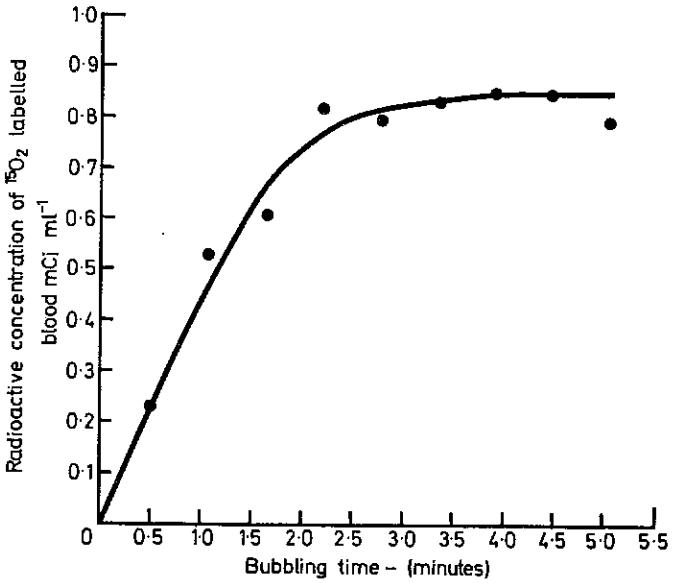

Figure 5.16 Performance of a ^{15}OO red cell labelling system using a 4 per cent O_2 in N_2 gas target

Particle	Deuteron
Nuclear reaction	$^{14}N(d,n)^{15}O$
Current	30 μA
Energy	16.1 MeV
Energy incident on target material	~ 6.3 MeV
Window material and thickness	Al 0.70 mm
Energy loss in window	~ 9.8 MeV
Beam distribution dimensions*	2.0–2.5 cm wide, 1.0–1.5 cm high
Target dimensions	12.7 cm wide, 2.6 cm high, 25.5 cm deep. Gas volume 842 ml at 760 mm Hg 20°C
Target pressure	0.54 kg cm^{-2} (7.7 lb in^{-2}) gauge
Sweep/target gas flow rate	8.3 ml s^{-1}
Sweep/target gas composition	4% O_2 in N_2
Steady state $^{15}O_2$ production at system output	~ 1.6 mCi s^{-1} ~ 0.20 mCi ml^{-1} 760 mm Hg 20°C ~ 120 mCi mM^{-1} O_2 760 mm Hg 20°C
Volume of blood in bubbling chamber	5 ml
Gas flow rate through blood	~ 0.8 ml s^{-1}
Typical ^{15}O activity in blood	~ 4.3 mCi in 5 ml†
Target output to system output	~ 10 m

* See section 2.4.

† Value variable, highly dependent on haemoglobin concentration and other factors (see text).

window degrades the 16 MeV deuteron beam to approximately 6.3 MeV. A normal target working pressure is 0.54 kg cm^{-2} (7.7 lb in^{-2}) gauge. Any sweep/target gas mixture of between 2 and 4 per cent O_2 in N_2 may be used at a target flow rate of about 8 ml s^{-1}. Typical irradiation conditions are given in *Figure 5.16.*

Soda Lime and Activated Charcoal Absorbers

A soda lime absorber 16 cm long, 2.5 cm diameter is sufficient for the removal of the $C^{15}O_2$ and $N^{15}O_2$ contaminants. The $^{15}O_3$ contaminant is decomposed in the soda lime to $^{15}O_2$. The soda lime absorber, the volume of which is not critical, may be of the type shown in *Figure 3.6.* However, it is important that the activated charcoal absorber used for the removal of $N_2{}^{15}O$ is not larger than necessary since this can result in a significant loss of $^{15}O_2$ activity also. A column 16 cm long, 2.5 cm diameter, at ambient temperature is adequate at the flow rate used.

Flowmeters and Filters

The flowmeters used in the system are of the variable area type. Since this type of flowmeter is pressure dependent the sweep gas flow rate is always determined from flowmeter B since this is virtually at atmospheric pressure. Flowmeter A reads low because of the elevated pressure at this point in the system. Flowmeters A and B have a range of 100–1000 ml min^{-1} (1.67–16.7 ml s^{-1}) (N_2) at 760 mm Hg and 18 °C. A normal scavenging gas flow rate is 50 l min^{-1}. Thus the scavenging gas flowmeter C has a range of 10–100 l min^{-1} at 760 mm Hg and 18 °C.

The gas line filters are of the type described in section 3.3. The Millipore filter at the input of the sterile assembly is a Swinnex-13 filter unit used with a type HA 0.45 μm filter, or a 25 mm diameter, 0.22 μm Millex disposable filter (see also section 4.1.3).

Gas Transmission Tubes

The system is connected with 2.2 mm diameter, 1.5 mm bore stainless steel tube. Where flexible connections are required 3.2 mm diameter, 2.0 mm bore nylon tube is used. The distance from the target to the processing equipment is approximately 10 m. Longer distances of up to 100 m may be used provided the target pressure is maintained at 0.54 kg cm^{-2}. Unless a high sweep gas flow rate is maintained there is inevitably a significant loss of activity due to decay in transit when long gas transmission tubes are used.

Sterile Assembly and By-Pass Needle Valve

The sterile assembly comprises the Millipore filter, the mixing chamber, a two-way tap and the filling/extracting syringe. The mixing chamber consists of a vertical glass tube 7 cm high, 2 cm diameter, above which is mounted the spray trap. At the input of the mixing chamber is a disposable two-way tap adjoining the Millipore filter. The disposable filling/extracting syringe is connected using a short length of small bore polyethylene tubing. Several such assemblies are in use; all are identical and designed in such a way that they are readily demountable for cleaning. As a precaution against foaming, the mixing chambers are prepared using an anti-foam agent containing silicones (see section 7.7, page 254).

Because red cells are easily haemolysed if subjected to violent agitation, it is necessary to restrict the flow of gas through the blood. This is done using the by-pass needle valve B which shunts most of the gas to waste, resulting in a very low flow rate ($\sim$ 0.8 ml s^{-1}) through the blood. Since the exchange of oxygen in a given red cell is very rapid, the amount of activity obtained in the blood is determined by the time of mixing, and gas oxygen concentration (partial pressure) and specific activity, rather than the flow rate. To obtain optimum control of the flow rate through the blood it is necessary to have some series impedance to the gas flow at the input of the sterile assembly. Normally the Millipore filter provides this, but when insufficient control is obtained from the by-pass needle valve, an additional needle valve may be required at the input of the Millipore filter.

Production Techniques and System Performance

Before bombardment the two-way tap A is set to its 'waste' position, the scavenge pump started and air removed from the system by flushing for half an hour with the sweep gas flowing at about 8 ml s^{-1}. The target pressure and sweep gas flow rate are then adjusted to 0.54 kg cm^{-2} and 8.3 ml s^{-1} respectively. The by-pass needle valve B is adjusted to produce a *small* flow rate (two or three bubbles a second) through about 5 ml of blood in a test sterile assembly. Having adjusted the flow rate in this way, this assembly is replaced by one containing the blood to be labelled, care being taken to ensure that tap A is in the 'waste' position during this procedure. With the sweep gas still flowing to waste, the yield monitor is checked and the irradiation started. A steady state of output activity is reached about 6 min after the start of bombardment at the flow rate and irradiation conditions stated in *Figure 5.16.*

Labelling is carried out by first turning tap A and then tap B to

their 'label' positions, the system output gas being allowed to bubble slowly through the blood for sufficient time to produce the desired radioactive concentration. When labelling is complete tap B is first turned to 'syringe' and then tap A to 'waste', after which the blood is extracted into the syringe. No significant advantage has been found by using de-oxygenated blood, or by reducing the temperature below ambient[6] when labelling. Blood samples supplied for labelling normally contain an anticoagulant such as heparin or ACD (see section 7.7, page 255).

It will be seen from *Figure 5.16* that the radioactive concentration reaches an equilibrium level of about 0.85 mCi ml^{-1} after a 4 min bubbling time, being approximately 95 per cent of the calculated maximum assuming a normal haemoglobin level of 14.5 g 100 ml^{-1} of blood[6]. The actual radioactive concentration achieved in a given blood sample depends upon many factors. Of particular importance is the haemoglobin concentration, the bubbling time, the specific activity of the $^{15}O_2$, and the partial pressure of oxygen in the sweep gas. Since the percentage saturation of haemoglobin rises with the partial pressure of oxygen present up to ~ 40 mm Hg[5], it would seem desirable to use a sweep gas containing an O_2 partial pressure close to this value. However, the use of such a gas mixture results in a relatively low specific activity (Table 5.2) and as we have seen, the specific activity is one of the principal factors which determines how much activity passes into the red cells. Thus the ideal gas mixture for red cell labelling with $^{15}O_2$ is one of high specific activity *and* relatively high oxygen concentration. Clearly this is another situation where one is faced with highly conflicting requirements; in practice a sweep gas mixture of between 2 and 4 per cent O_2 in N_2 has been found to be satisfactory.

An increase in the specific activity* of $^{15}O_2$ in a given sweep gas mixture may be achieved by raising the beam current (*Figure 5.6*). The amount of this increase is limited by the beam distribution since the beam filter will not withstand a concentrated high current beam. However, provided the beam is well spread it is possible to run at up to 45 or 50 μA with no adverse effects on the filter.

Should less than the maximum attainable blood radioactive concentration be required, either the bubbling time or the beam current may be reduced. It is preferable to use a shorter bubbling time as this reduces the possibility of haemolysis. When a beam current lower than 30 μA is used the activated charcoal absorber is quite

* Some advantage may be gained by using a closed circuit system as described in section 5.4.6 provided there is no gradual accumulation of any undesirable long lived contaminant which will also label the blood, e.g. ^{11}CO.

capable of coping with the increased $N_2{}^{15}O$ production (*Figure 5.7*). However, since the solubility of N_2O in blood[27] is significant compared to that of oxygen[5] (~ 0.47 ml N_2O ml^{-1} blood: ~ 1.3 ml O_2 ml^{-1} blood at 37°C and 760 mm Hg), the activated charcoal absorber is regularly changed, as is the soda lime absorber also.

For some measurements the presence of even trace amounts of long-lived contaminants is undesirable; one such contaminant is ^{11}CO. (The trace amount of $^{13}N_2$ does not present a problem as its solubility in blood is negligible.) Thus the radiochemical purity of typical labelled blood samples is regularly checked by decay curve analysis, a value in excess of 99.9 per cent $^{15}O_2$ being usual. The composition of the system output gas is determined radio-gas chromatographically.

In systems where the irradiation parameters differ widely from those shown in *Figure 5.16* care should be taken to investigate the stability of the system output gas composition and also the radiochemical purity of typical labelled blood samples under all anticipated operating conditions. As with all procedures where blood is being handled for labelling and subsequent re-injection, every care should be taken to avoid accidental red cell damage and, of course, contamination by non-sterile media (see also section 7.7, page 253).

5.4.6 Other ^{15}O Production Systems

Composite ^{15}O Production and Labelling Systems

In general, separate systems are to be preferred for the production and use of ^{15}O labelled gases since this provides the greatest degree of flexibility, purity of product and reliability. However, it may be more convenient or economic to combine two or more systems into a composite unit. For instance it will be seen from *Figures 5.13* and *5.15* that the systems for $H_2{}^{15}O$ production and $^{15}O_2$ red cell labelling are identical up to the output of flowmeter B. Thus if both labelling facilities are required it is possible to use a common $^{15}O_2$ production system and direct the system output gas to the respective labelling equipment using a two-way tap. Similarly a composite system capable of producing $^{15}O_2$ and $C^{15}O$ is feasible using a suitable arrangement of shunts, and taps or solenoid valves (cf *Figures 7.8* and *7.14*, and section 3.8, page 85). In this case a common sweep/target gas of 4 per cent O_2 in N_2 would be desirable.*

* Suitable precautions should be taken when using 4 per cent O_2 in N_2 for $C^{15}O$ production since the system output gas contains 8 per cent CO (see section 9.3.2, page 317).

If the composite system were required to produce $C^{15}O_2$ as well, it would also be necessary to adequately flush the target with the 2.5 per cent CO_2 in N_2 sweep/target gas, since the presence of oxygen could prematurely exhaust the charcoal furnace resulting in breakthrough and unacceptable levels of $^{15}O_2$ contaminant.

Considerable care has to be taken in the design of complex composite radioactive gas production systems since undesirable contaminants can appear in the system output gas, especially following the operation of arrays of taps or solenoid valves. Thus the performance of such systems should be thoroughly ascertained in all modes of operation and under all anticipated irradiation conditions. An important feature of such systems is that they should be 'fail safe'.

Closed Circuit ^{15}O Systems

All the ^{15}O production systems so far described have been of the open circuit type, that is to say, the system output gas is passed to waste. An alternative is to return the system output gas to the target for re-irradiation as shown in *Figure 5.17*. Such a system is known as a closed circuit system. The principal advantage of such a system is that since no product nuclei are wasted, the specific activity of the sweep/target gas can be maximized. Closed circuit ^{15}O systems are therefore of value where only a limited beam current is available (possibly of low energy), or where the maximum attainable specific activity is required. Thus they are preferred by some workers for red cell labelling and the production of $H_2{}^{15}O$[38,39]. It is important, however, that the target volume is kept to a minimum (not greater than approximately 300 ml gas volume at 760 mm Hg and 20 °C) since a long gas residence time in the target results in the decay of a significant proportion of the recirculated ^{15}O product nuclei. A high circulating gas flow rate is required to obtain optimum efficiency, a typical value being between 8 and 16 ml s^{-1}. The pump should be of small dead volume, oil free, and capable of maintaining an output pressure of about 1 kg cm^{-2} (14 lb in^{-2}) at the above flow rate. Oil free diaphragm and peristaltic tube pumps have been used successfully in closed circuit systems (see section 3.11.3, page 98).

To operate the system shown in *Figure 5.17* taps A and B (which should be separated by the minimum length of tube) are turned to 'fill' and 'waste' respectively and the system thoroughly flushed out to waste with the pump running. Tap B is then turned to 'circulate' and the system filled with the sweep/target gas (typically 4 per cent O_2 in N_2) until the desired target pressure is reached, tap A then being turned to 'circulate' also. The irradiation is then started and the yield allowed to reach equilibrium. Samples of radioactive gas

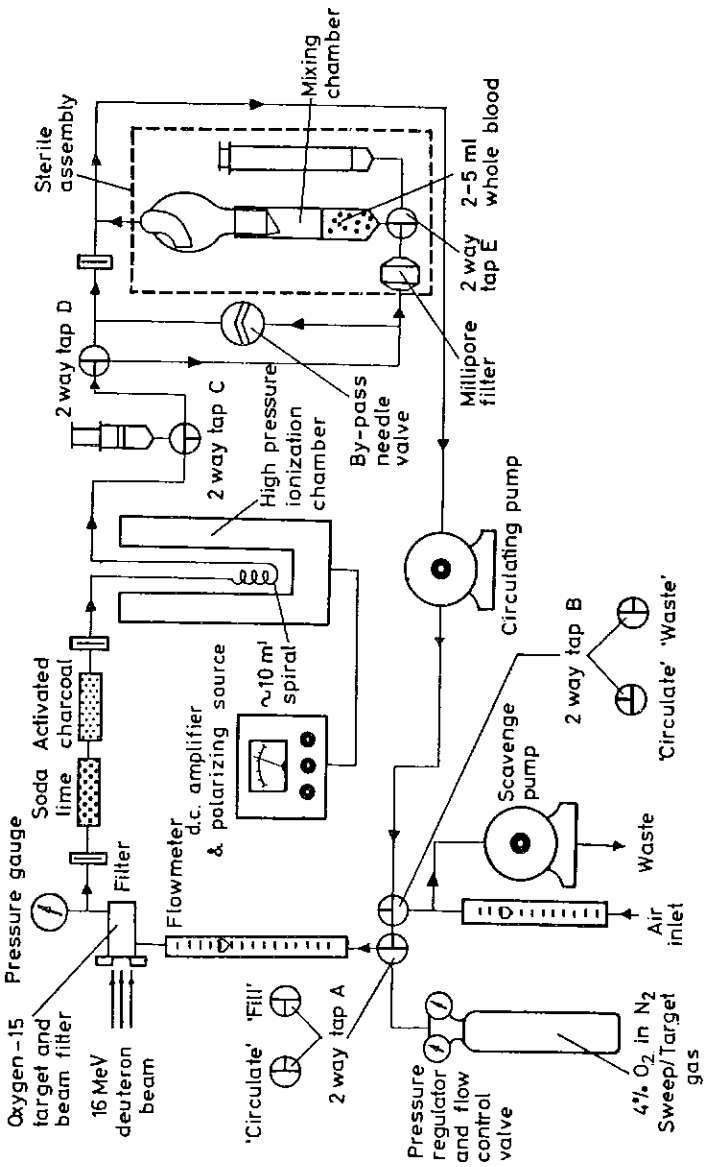

Figure 5.17 ^{15}OO closed circuit system using a 4 per cent O_2 in N_2 gas target

may be dispensed into a syringe from tap C, or the gas passed through the mixing chamber if physiological solutions are to be labelled.

A disadvantage of closed circuit ^{15}O systems can be the gradual accumulation of undesired long-lived contaminants such as ^{11}C and ^{13}N. Care should be taken to avoid excessively long irradiation periods since the proportion of oxygen in the sweep/target gas is gradually reduced, it being radiolytically combined with the nitrogen.

5.4.7 ^{15}O Production System Selection

Since all the ^{15}O production systems use a gas as the target material, no preparation of target material is required. Moreover, the use of an identical design of target for all the systems allows a common target to be used provided care is taken to flush thoroughly the target when a different sweep/target gas is introduced. In general the beam power density (beam distribution) is not critical provided concentrated high current beams are avoided.

The choice of ^{15}O production system is determined principally by whether only gas phase, or gas phase and 'solution' ($H_2{}^{15}O$ and $^{15}O_2$ red cells) samples are required. If $^{15}O_2$ is required only in the gas phase, the system described in section 5.4.1 (page 136) is adequate. However, if labelled solutions are also envisaged the systems described in sections 5.4.4 (page 150) and 5.4.5 (page 157) should be considered, since with a simple modification (*viz.* a two-way tap at the output of flowmeter B), both gas phase and solution samples may be prepared. Of course, if only $H_2{}^{15}O$ and $^{15}O_2$ red cells are required the systems described in sections 5.4.4 and 5.4.5 may be used as described therein.

The $C^{15}O_2$ production system described in section 5.4.2 (page 140) uses a CO_2/N_2 mixture as the sweep/target gas. Thus the product at the target output is in the desired chemical form. Hence, only a small activated charcoal furnace is required for the removal of trace $^{15}O_2$ with only a moderate loss of the desired product nuclei. This is a much better arrangement than earlier systems[10] where the ^{15}O was produced as $^{15}O_2$ (using a O_2/N_2 sweep/target gas mixture) and converted to $C^{15}O_2$ using large activated charcoal and cupric oxide furnaces, resulting in an 80 per cent loss of the desired product nuclei.

Since no satisfactory method for the 'direct' production of $C^{15}O$ has been found, the system for $C^{15}O$ production (section 5.4.3, page 145) is based on earlier systems[10]. However, the ^{15}O recovery at the system output has been maximized by using an optimum

TABLE 5.7

COMPARATIVE PERFORMANCE OF ^{15}O PRODUCTION SYSTEMS

Production system	Typical ^{15}O production: Gas phase: mCi s^{-1}	Gas phase: mCi ml^{-1} 760 mm Hg 20°C	Solution: mCi	Solution: ml	Remarks
^{15}OO $^{14}N(d,n)^{15}O$	1.6	0.20	N.A.*	N.A.	Simple target design No preparation of target material Beam power density (beam distribution) not critical for optimum yield provided concentrated beam is not used No furnace required
$C^{15}OO$ $^{14}N(d,n)^{15}O$	1.2	0.14	N.A.	N.A.	Simple target design. No preparation of target material. Direct production of required chemical form in target. Beam power density not critical provided concentrated beam is not used. Higher production at system output than that obtained from $^{15}O_2$ system and large activated charcoal and cupric oxide furnaces. Small activated charcoal furnace required for removal of contaminants
$C^{15}O$ $^{14}N(d,n)^{15}O$	1.2	0.14	N.A.	N.A.	Simple target design No preparation of target material Beam power density not critical provided concentrated beam is not used $^{15}O_2$ converted to $C^{15}O$ by small activated charcoal furnace
$H_2{}^{15}O$ $^{14}N(d,n)^{15}O$	N.A.	N.A.	78†	2	Simple target design No preparation of target material Beam power density not critical provided concentrated beam is not used Heated catalyst required Minimum H_2O volume ~ 0.75 ml
^{15}OO Red cells $^{14}N(d,n)^{15}O$	N.A.	N.A.	4.3‡	5	Simple target design No preparation of target material Beam power density not critical provided concentrated beam is not used No heated reagents required Minimum blood volume ~ 2 ml

* Not applicable.
† Activity at end of 3 min bubbling period.
‡ Activity at end of 4 min bubbling period.

volume of activated charcoal, and the minimum number and volume of other reagents.

The comparative performance of the ^{15}O production systems is given in Table 5.7.

REFERENCES

1 Ausloos, P. (Ed.) (1968). *Fundamental Processes in Radiation Chemistry*, p. 312. New York; Wiley.

2 *Ibid.*, p. 311.

3 *Ibid.*, p. 310.

4 *Ibid.*, p. 326.

5 Bell, G. H., Davidson, J. N. and Scarborough, H. (1968). *Textbook of Physiology and Biochemistry*. 7th edn., p. 680. Edinburgh & London; Livingstone.

6 *Ibid.*, p. 681.

7 Bewley, D. K., Field, S. B. and Parnell, C. J. (1967), 'Physical aspects of the deuteron and helium nuclei beams from the M.R.C. cyclotron.' *Phys. in Med. and Biol.* **12**, 1, 1–12.

8 Boltz, D. F. (Ed.) (1958). *Colorimetric Determination of Non-metals*, p. 84. New York; Wiley.

9 Brownell, G. L., Burnham, C. A., Hoop, B. (Jr.) and Kazemi, H. (1972). 'Positron scintigraphy with short-lived cyclotron produced radiopharmaceuticals and a multicrystal positron camera.' *Proceedings of I.A.E.A. Symposium on Medical Radioisotope Scintigraphy*. Monaco.

10 Buckingham, P. D. and Forse, G. R. (1963). 'The preparation and processing of radioactive gases for clinical use.' *Int. J. Appl. Radiation and Isotopes* **14**, 439–45.

11 Clark, J. C., Matthews, C. M. E., Silvester, D. J. and Vonberg, D. D. (1967). 'Using cyclotron produced isotopes at Hammersmith Hospital.' *Nucleonics* **25**, 6, 54–62.

12 Coward, H. F. and Jones, G. W. (1952). *Limits of Flammability of Gases and Vapors*. Bulletin 503, Bureau of Mines, Government Printing Office. Washington 25, D.C., U.S.A.

13 Dillman, L. T. (1970). 'Radionuclide decay schemes and nuclear parameters for use in radiation-dose estimation, part 2.' *J. Nuclear Med.* (Medical Internal Radiation Dose Committee) **11**, Suppl. 4, pamphlet No. 6.

14 Dollery, C. T. and West, J. B. (1960). 'Regional uptake of radioactive oxygen, carbon monoxide and carbon dioxide in the lungs of patients with mitral stenosis.' *Circulation Res.* **8**, 4, 765–71.

15 Dollery, C. T. and West, J. B. (1960). 'Metabolism of Oxygen-15.' *Nature, Lond.* **187**, 4743, 1121.

16 Dollery, C. T., Heimburg, P. and Hugh-Jones, P. (1962). 'The relationship between blood flow and clearance rate of radioactive carbon dioxide and oxygen in normal and oedematous lungs.' *J. Physiol.* **162**, 93–104.

17 Dollery, C. T., Dyson, N. A. and Sinclair, J. D. (1960). 'Regional variations

in uptake of radioactive CO in the normal lung.' *J. Appl. Physiol.* **15**, 3, 411–17.

18 Dollery, C. T., Fowler, J. F., Hugh-Jones, P., Matthews, C. M. E. and West, J. B. (1963). 'The preparation and use of radioactive oxygen, carbon monoxide and carbon dioxide for investigation of regional lung function and their comparison with xenon-133.' *Sonderband zur Strahlenbehandlung* **53**, 88.

19 Dollery, C. T., West, J. B., Wilcken, D. E. L., Goodwin, J. F. and Hugh-Jones, P. (1961). 'Regional pulmonary blood flow in patients with circulatory shunts.' *Br. Heart J.* **23**, 3, 225–35.

20 Dyson, N. A., Sinclair, J. D. and West, J. B. (1960). 'A comparison of the uptakes of oxygen-15 and oxygen-16 in the lung.' *J. Physiol.* **152**, 325–36.

21 Dyson, N. A., Hugh-Jones, P., Newbery, G. R. and West, J. B. (1959). 'The preparation and use of oxygen-15 with particular reference to its value in the study of pulmonary malfunction.' *Proceedings of Second U.N. Conference on the Peaceful Uses of Atomic Energy, Geneva, 1958*. London; Pergamon.

22 Dyson, N. A., Hugh-Jones, P., Newbery, G. R., Sinclair, J. D. and West, J. B. (1960). 'Studies of regional lung function using radioactive oxygen.' *Br. Med. J.* 1, 231–8.

23 Friedlander, G., Kennedy, J. W. and Miller, J. M. (1966). *Nuclear and Radiochemistry*, 2nd edn, p. 61. New York; Wiley.

24 Glass, H. I. and Silvester, D. J. (1970). Review article: 'Cyclotrons in Nuclear Medicine.' *Br. J. Radiol.* **43**, 589–601.

25 Harvey, B. G. (1962). *Introduction to Nuclear Physics and Chemistry*, p. 164. New Jersey; Prentice Hall.

26 Jones, T., Levene, D. L. and Greene, R. (1970). 'Use of ^{15}O labelled carbon dioxide for inhalation radiocardiograms and measurements of myocardial perfusion.' *Proceedings of I.A.E.A. Symposium on Dynamic Studies with Radioisotopes in Medicine*. Rotterdam. STI/PUB/263.

27 Kety, S. S. *et al.* (1948). 'Solubility of N_2O in blood and brain.' *J. Biol. Chem.* **173**, 487–96.

28 Knipping, H. W. and Venrath, H. (1958). 'The use of isotopes in the diagnosis of lung disease.' *Semaine des Hopitaux* **34**, 449.

29 Remy, H. (1956). *Treatise on Inorganic Chemistry*, vol. 1, p. 693. Amsterdam; Elsevier.

30 Ritchie, A. I. M. (1968). 'The production of the radioisotopes ^{11}C, ^{13}N, and ^{15}O using the deuteron beam from a 3 MeV Van-de-Graaff accelerator.' *Nuclear Instrms and Methods* **64**, 181–4.

31 Saltzman, B. E. (1954). 'Colorimetric microdetermination of nitrogen dioxide in the atmosphere.' *Analyt. Chem.* **26**, 12, 1949–55.

32 Samuel, D. and Steckel, F. (1968). 'Research with the isotopes of oxygen (^{15}O, ^{17}O and ^{18}O) during 1963–1966' (Bibliography). *Int. J. Appl. Radiation and Isotopes* **19**, 175–217.

33 Ter-Pogossian, M. M. and Powers, W. E. (1958). 'The use of radioactive oxygen-15 in the determination of oxygen content in malignant neoplasms.' *Proceedings of the 1st UNESCO International Conference of*

Radioisotopes in Scientific Research, Paris, 1957. Vol. 3, pp. 625–36. New York; Pergamon.

[34] Ter-Pogossian, M. M., Spratt, J. S. (Jr), Rudman, S. and Spencer, A. (1961). 'Radioactive oxygen-15 in study of kinetics of oxygen of respiration.' *Am. J. Physiol.* **201**, 3, 582–6.

[35] Ter-Pogossian, M. M., Eichling, J. O., Davis, D. O., Welch, M. J. and Metzger, J. M. (1969). 'The determination of regional cerebral blood flow by means of water labelled with radioactive oxygen-15.' *Radiology* **93**, 1, 31.

[36] Tilbury, R. S., Mamacos, J. P. and Laughlin, J. S. (1970). 'Initial experience with a 30 in. isochronous cyclotron for medical use.' *In Uses of Cyclotrons in Chemistry, Metallurgy and Biology* (Ed. by C. B. Amphlett), p. 117. London; Butterworths.

[37] Vonberg, D. D., Baker, L. C., Buckingham, P. D., Clark, J. C., Finding, K., Sharp, J. and Silvester, D. J. (1970). 'Target systems for radioisotope production on the Medical Research Council cyclotron.' *In Uses of Cyclotrons in Chemistry, Metallurgy and Biology* (Ed. by C. B. Amphlett), p. 258. London; Butterworths.

[38] Welch, M. J. and Ter-Pogossian, M. M. (1968). 'Preparation of short half-lived radioactive gases for medical studies.' *Radiatn Res.* **36**, 3, 580–7.

[39] Welch, M. J., Lifton, J. F. and Ter-Pogossian, M. M. (1969). 'Preparation of millicurie quantities of oxygen-15 labelled water.' *J. Labelled Compounds* **5**, 168–72.

[40] West, J. B. (1967). 'The use of radioactive materials in the study of lung function.' Medical Monograph No. 1, revised edn. U.K.A.E.A. Amersham, England; The Radiochemical Centre.

[41] West, J. B. and Dollery, C. T. (1960). 'Distribution of blood flow and ventilation-perfusion ratio in the lung, measured with radioactive CO_2.' *J. Appl. Physiol.* **15**, 3, 405–10.

[42] West, J. B. and Dollery, C. T. (1961). 'Absorption of inhaled radioactive water vapour.' *Nature, Lond.* **189**, 4764, 588.

[43] West, J. B., Dollery, C. T. and Hugh-Jones, P. (1961). 'The use of radioactive carbon dioxide to measure regional blood flow in the lungs of patients with pulmonary disease.' *J. Clin. Invest.* **40**, 1, 1–12.

Nitrogen-13

6.1 INTRODUCTION

Nitrogen-13 is a cyclotron produced radionuclide having a half-life of 10 min and decaying by the emission of positrons having a maximum energy of 1.19 MeV to the stable nuclide carbon-13 (*Figure 6.1*)[8].

Radiation	Per cent per disintegration	Transition energy (MeV)
Beta plus	100	1·19 *
Reference: (8)		
*Endpoint energy (MeV)		

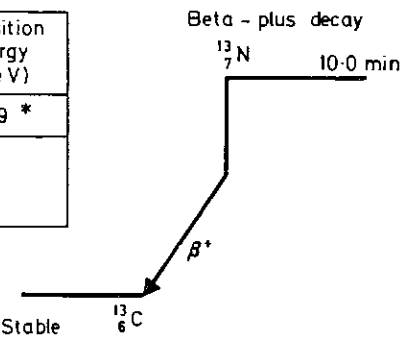

Figure 6.1 Nitrogen-13 decay scheme

Since nitrogen is relatively insoluble in blood, molecular nitrogen labelled with ^{13}N is an ideal tracer for use in some pulmonary function studies[24,25], in particular the investigation of regional pulmonary ventilation[10,11,18,20]. By careful preparation it is possible to produce solutions of $^{13}N_2$ (^{13}NN) in water or physiological saline[3,9], these being of particular value in the study of regional pulmonary blood flow[5].

The 0.511 MeV gamma radiation resulting from positron annihilation permits measurements over regions of interest using arrays of fixed detectors[2,10]. The short half-life of nitrogen-13 makes it essential that clinical facilities for the use of this radionuclide are sited near to the point of production. Both 'on line' and batch-wise techniques are used, the choice to some extent being determined by the form in which the $^{13}N_2$ is to be administered, that is to say, in the gas phase or in solution.

Although $^{13}N_2$ is by far the most widely used chemical form in most centres of nuclear medicine, there is a growing interest in ^{13}N labelled compounds such as $^{13}NH_3$ and $HC^{13}N$ for use in sophisticated tracer studies[6,7,12,13,15,17,19,21,23].

TABLE 6.1

SOME PHYSICAL CHARACTERISTICS AND CLINICAL USES OF ^{13}NN

Half-life (min)	*Principal emissions*	*Nuclear reaction for production in typical target systems*	*Practical threshold energy** (Mev)	*Typical available radioactive concentration and specific activity†*	*Clinical uses and references*
10.0	β^+ 1.19 MeV 1.00 per disintegration resulting in 2.00 0.511 MeV annihilation gamma photons per disintegration	$^{12}C(d,n)^{13}N$	~ 3	25 mCi ml^{-1} 1.9×10^4 mCi mM^{-1} N_2 (760 mm Hg 20°C)	Regional pulmonary ventilation and blood flow investigations (5, 9, 10, 11, 18, 20, 24, 25)

* Derived from data in 'The production of the radioisotopes ^{11}C, ^{13}N and ^{15}O using the deuteron beam from a 3 MeV Van de Graaff accelerator.' A. I. M. Ritchie. *Nuclear Instruments and Methods*, 64, 181–4 (1968).
† Based on relevant data contained in this work.

6.2 TARGET SYSTEMS

From Table 2.1 it will be seen that ^{13}N may be produced by several nuclear reactions. Some of these are rarely used either because they have high threshold energies at which there could be interference from undesired nuclear reactions, or because of a low yield of product nuclei. The most commonly used is the $^{12}C(d,n)^{13}N$ reaction (Table 6.1). Thus the target material is carbon as CO_2, CO, graphite[3,22] or activated charcoal[4]. Hence a number of target designs are feasible; in practice each has specific advantages for use in a given production system (Table 6.2).

Generally speaking $^{13}N_2$ is required either in the gas phase or in solution. Any of the systems to be described will in principle produce $^{13}N_2$ in the gas phase. In practice, however, the physiological application must also be considered and this precludes the 'on line' use of some systems since the target effluent contains a high proportion of CO_2 or CO.

Nitrogen-13 solutions are more difficult to produce. Since the solubility of N_2 is low (~ 0.014 ml ml^{-1} H_2O at 760 mm Hg, 40°C)[16], only a relatively small number of $^{13}N_2$ molecules will pass into solution if the system output gas is bubbled through it, a typical solution radioactive concentration being the order of 6 μCi ml^{-1}. Since radioactive concentrations of approximately 0.2 mCi ml^{-1} are necessary for some physiological studies, a more sophisticated approach is necessary. Basically $^{13}N_2$ solutions are prepared by absorbing the system output CO_2 in sodium hydroxide solution, thus concentrating the product nuclei in a bubble consisting of the accumulated residual permanent gases found in the system. When this bubble is shaken vigorously with water or physiological saline, some of the $^{13}N_2$ molecules pass into solution. The amount of $^{13}N_2$ which passes into solution depends upon several factors, the most important of which are the specific activity of the $^{13}N_2$ and the partial pressure of N_2 in the gas bubble. It is desirable that the target and processing systems should contain as little N_2 and other sparingly soluble trace gases as possible and careful design is necessary to achieve this.

We shall now consider in detail three types of target system for $^{13}N_2$ production, two of which are suitable for the preparation of $^{13}N_2$ solutions.

6.2.1 Target for $^{13}N_2$ Production Using CO_2 as a Target Material (Gas Target)

Target Design

Nitrogen-13 may be continuously produced in a gas target using CO_2 as the combined sweep gas and target material. A typical target is shown in *Figure 6.2*. Designed for use with a 16 MeV deuteron beam, it produces ^{13}N by the $^{12}C(d,n)^{13}N$ reaction. The target is made of aluminium and uses a 0.7 mm aluminium combined beam entry window and degrading filter to reduce the incident charged particle energy to ~ 6.3 MeV. A gas pressure of approximately 0.68 kg cm^{-2} (9.7 lb in^{-2}) gauge is maintained which ideally further reduces the deuteron beam energy to ~ 3 MeV (the practical threshold energy for the $^{12}C(d,n)^{13}N$ reaction).

TABLE 6.2

PERFORMANCE OF DIFFERENT TARGET SYSTEMS FOR ^{13}NN PRODUCTION

Target	*Sweep gas*	*Typical beam current* μA	*Target pressure* kg cm^{-2} (lb in^{-2})	*Target output flow rate* ml s^{-1}	*Typical total radioactive concentration at target output* mCi ml^{-1} 760 mm Hg 20°C	*Typical total production rate at target output* mCi s^{-1}	*Possible contaminants at target output*	*Remarks*
CO_2 gas $^{12}C(d,n)^{13}N$	CO_2	30	0.68 (9.7)	1.9	0.042	0.080	$C^{15}OO$ ^{13}NNO $^{13}NO_2$	Target system used for batch-wise production of high radioactive concentration ^{13}NN gas and physiological saline solutions Thorough flushing of target necessary to minimize $C^{15}OO$ contamination Use 'on line' for physiological studies inadvisable due to CO_2 sweep/target gas Beam power density (beam distribution) not critical for optimum yield

TABLE 6.2 (continued)

PERFORMANCE OF DIFFERENT TARGET SYSTEMS FOR ^{13}NN PRODUCTION

Target	*Sweep gas*	*Typical beam current* μA	*Target pressure* kg cm^{-2} (lb in^{-2})	*Target output flow rate* ml s^{-1}	*Typical total radioactive concentration at target output* mCi ml^{-1} 760 mm Hg 20°C	*Typical total production rate at target output* mCi s^{-1}	*Possible contaminants at target output*	*Remarks*
Graphite matrix $^{12}C(d,n)^{13}N$	CO_2	60	0.07 (1.0)	1.1	0.36	0.40	$HC^{13}N$ $^{13}NO_2$	Target system used for batch-wise production of high radioactive concentration ^{13}NN gas and physiological saline solutions High beam power density necessary for optimum yield Use 'on line' inadvisable due to high CO level in target output gas
Activated charcoal $^{12}C(d,n)^{13}N$	He	35	0.018 (0.25)	1.0	0.053	0.053	$HC^{13}N$ $C^{15}O$	Target system used 'on line' for continuous ^{13}NN production Unsuitable for high radioactive concentration gas or solution preparation due to high adsorbed gas content of activated charcoal Beam power density not critical for optimum yield

It will be seen that this target is identical to that described in chapter 5 for ^{15}O production and, provided it is thoroughly flushed before bombardment, it may be used for the production of either radionuclide. Thus the design parameters considered in section 5.2 also apply, with the exception that the transmission of the product

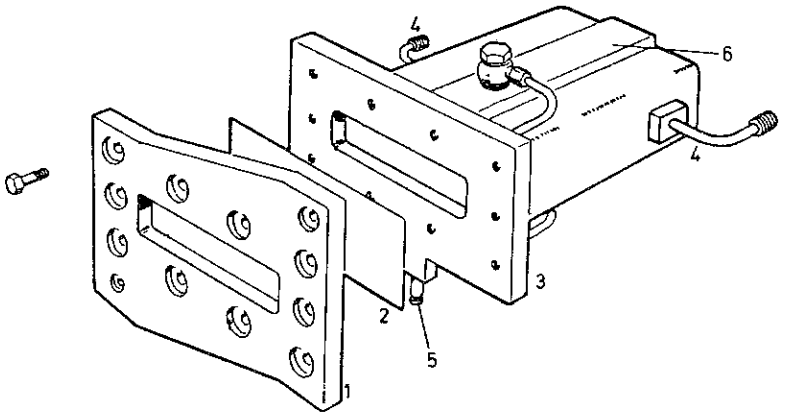

1. Target mounting plate.
2. Air cooled window/beam filter (0·7 mm aluminium).
3. Water cooled gas tight target box.
4. Sweep/target gas connections.
5. Cooling water connection.
6. Cooling water channel.

Internal Dimensions:	12·7 cm wide 2·6 cm high 25·5 cm deep
Gas Volume:	842 ml at 760 mm Hg 20°C

Figure 6.2 CO_2 gas target for ^{13}NN production

nuclei over long distances is less of a problem due to the longer half-life of ^{13}N.

The principal use of this target system is for the batch-wise production of high specific activity $^{13}N_2$ gas and physiological saline solutions. Its use 'on line' for physiological studies is inadvisable since, even if diluted, the output gas would probably still contain an unacceptable proportion of CO_2. In general, large volume low pressure targets for use at high energies are to be avoided. Experi-

mental bombardments using this type of target have shown that there is virtually no improvement in the production rate of ^{13}N and one has the disadvantage of a larger 'dead volume' resulting in a lower radioactive concentration at the target output. The flushing time for such a target is also considerably longer than that required for a small volume high pressure target.

Target Performance

Table 6.2 shows the performance under typical irradiation and flow rate conditions, of the target shown in *Figure 6.2*. The gas circuit used for these measurements is shown in *Figure 6.12*. Analytical grade CO_2 sweep gas was used containing 10–50 vpm of residual gases. Yield measurement was by a 10 ml copper spiral in a high pressure ionization chamber. It was found that if the target was thoroughly flushed before bombardment (18 h at 25 ml min^{-1}) the radiochemical purity of the product nuclei at the target output was in excess of 99 per cent $^{13}N_2$, the only significant contaminant being $C^{15}O_2$, formed by the $^{14}N(d,n)^{15}O$ reaction on trace nitrogen in the system. Traces of $^{13}N_2O(^{13}NNO)$ and $^{13}NO_2$ were also found in some bombardments. Inadequate flushing of the target resulted in the formation of significant amounts ($\sim$ 6 per cent) of $C^{15}O_2$ ($C^{15}OO$). Since $^{13}NO_2$ is accumulated by reaction with a copper spiral this contaminant could give rise to an inaccurate yield indication as it becomes irreversibly adsorbed in the yield measuring spiral. Thus the yield measuring spiral was preceded by a copper spiral trap. The presence of $^{13}NO_2$ and the efficiency of the trap were ascertained by taking gas samples from points X and Y (*Figure 6.12*) and absorbing the CO_2 and any NO_2 in these samples in 5N sodium hydroxide solution. Any absorbed $^{13}N_2$ was removed by bubbling N_2 through the NaOH solution, the residual activity being due to $^{13}NO_2$ or $C^{15}O_2$. Since the $C^{15}O_2$ content of the gas samples could be determined radio-gas chromatographically, it was possible to arrive at an estimate of the $^{13}NO_2$ activity. The label of this compound was confirmed by decay curve analysis. In fact only trace amounts of $^{13}NO_2$ activity were found at the target output.

Two columns were used in the radio-gas chromatograph; a 30 cm × 4.8 mm 80–100 mesh molecular sieve (type 5A) for the analysis of N_2, O_2 and CO, and a 1.5 m × 4.8 mm 80–100 mesh Porapak-Q to separate N_2 from CO_2 and N_2O at 50 °C (see section 3.2.3, page 50).

The relationship between beam current and $^{13}N_2$ recovery at a constant target pressure and flow rate was investigated, the result

being shown in *Figure 6.3*. As can be seen the rate of recovery increases linearly with beam current up to 40 μA. The maximum beam current of 16 MeV deuterons which the 0.7 mm aluminium target window can withstand is largely determined by the beam

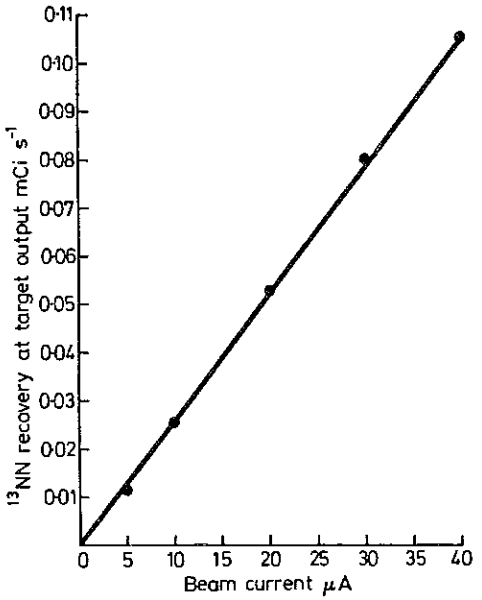

Nuclear reaction	^{12}C (d, n) ^{13}N
Beam energy incident on target material	~ 6·3 MeV
Beam distribution	5·0–7·5 cm wide 1·0–1·5 cm high
Sweep/target gas	CO_2
Sweep/target gas flow rate	2 ml s^{-1}
Target pressure	0·66 kg cm^{-2} (9·45 lb in^{-2}) gauge

Figure 6.3 CO_2 gas target: ^{13}NN recovery *versus* beam current

distribution. A beam current of 40 μA is close to the maximum at which this type of target may be used with a beam 5–7.5 cm wide and 1 cm high. It is preferable to have a well spread beam not only to minimize the possibility of target window failure, but also to avoid the possibility of the beam striking the end of the target box. This may happen especially when a highly concentrated beam

is used since the density of the gas in the beam path is reduced as it is heated by the beam.

It will be seen from Table 6.2 that the production rate is only about 20 per cent of that obtained from the graphite matrix target, the alternative target used for $^{13}N_2$ solution preparation. This is not such a disadvantage as it might at first appear since the *specific activity* of the $^{13}N_2$ is much higher than that obtainable from the graphite matrix target, and high specific activities are necessary for $^{13}N_2$ solution preparation. In practice the radioactive concentration of $^{13}N_2$ solutions obtained using the gas target is very comparable to that obtained using the graphite matrix target (see Tables 6.3 and 6.4).

The CO_2 gas target may be used for the batch-wise production of $^{13}N_2$ gas samples of useful radioactive concentration, although for maximum activity $^{13}N_2$ gas samples, the graphite matrix target described in section 6.2.2 is to be preferred (Tables 6.3 and 6.4).

The operational characteristics of the CO_2 gas target for $^{13}N_2$ solution preparation may be summarized as follows:

(*a*) The specific activity of the $^{13}N_2$ is limited principally by the purity of the sweep/target gas.

(*b*) The product nuclei are easily recovered from the target.

(*c*) No preparation of target material is required.

(*d*) Low energy deuteron beams may be used (with appropriate adjustment of target window thickness).

(*e*) The beam distribution is not critical provided highly concentrated beams are not used.

(*f*) The target pressure must be maintained during bombardment to prevent the beam from striking the end of the target.

(*g*) No ^{11}C labelled contaminants are produced.

Procedures for using the CO_2 gas target for the batch-wise preparation of $^{13}N_2$ gas phase and solution samples are fully described in section 6.3.1 (page 191).

6.2.2 Target for $^{13}N_2$ Production Using Graphite as a Target Material

Target Design

An alternative type of ^{13}N target for batch-wise gas phase and solution preparation is the graphite matrix target. Designed for use with a concentrated 16 MeV deuteron beam it produces ^{13}N by the ^{12}C(d,n)^{13}N reaction. As mentioned in section 6.2, when making $^{13}N_2$ for use in solution it is imperative that unwanted gases are excluded from the cyclotron target, its sweep gas and the gas

handling system. If these unwanted gases are insoluble they will have the undesired effect of reducing the partial pressure of N_2 and thus the proportion of $^{13}N_2$ dissolving in the final solution. Hence the target material is carbon in the form of graphite, the adsorbed gas content of which is much lower than that of activated charcoal used in the target for gas phase $^{13}N_2$ preparation described in section 6.2.3.

The complete target is shown in *Figures 6.4* and *6.5*. The target material consists of a block of graphite* 13.7 cm wide, 2.5 cm high

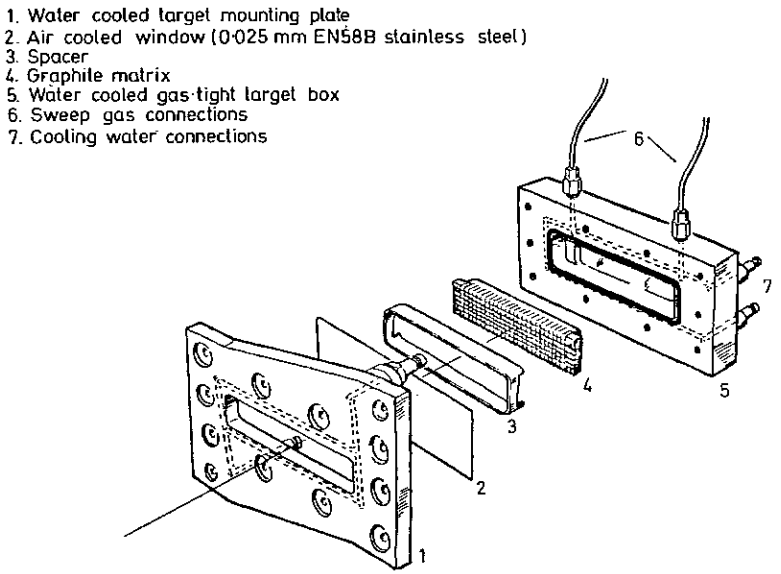

Figure 6.4 Graphite matrix target for ^{13}NN production

and 1.3 cm thick in the direction of the beam path, the surface of which is cut (to a depth of 8 mm) into a matrix of rectangular prisms of 3 mm × 3 mm cross section. This block fits into the aluminium water-cooled gas-tight target box which also contains the sweep gas input and output ports. An aluminium spacer is used to retain the graphite block in position, supporting it about 9 mm from the 0.025 mm stainless steel beam entry window. The whole assembly is secured by the water-cooled aluminium target mounting plate which bolts onto the target box. An air blast is used to cool the foil window.

* General purpose extruded graphite grade EY9 (supplied by Morganite Carbon Ltd).

The sweep gas is CO_2†. During bombardment the graphite, which is raised to a temperature in excess of 1450 °C by the beam power (typically ~ 920 W at 60 μA) is eroded as the following reaction occurs:

$$C + CO_2 \longrightarrow 2CO$$

This continuous erosion leads to the release of volatile ^{13}N labelled

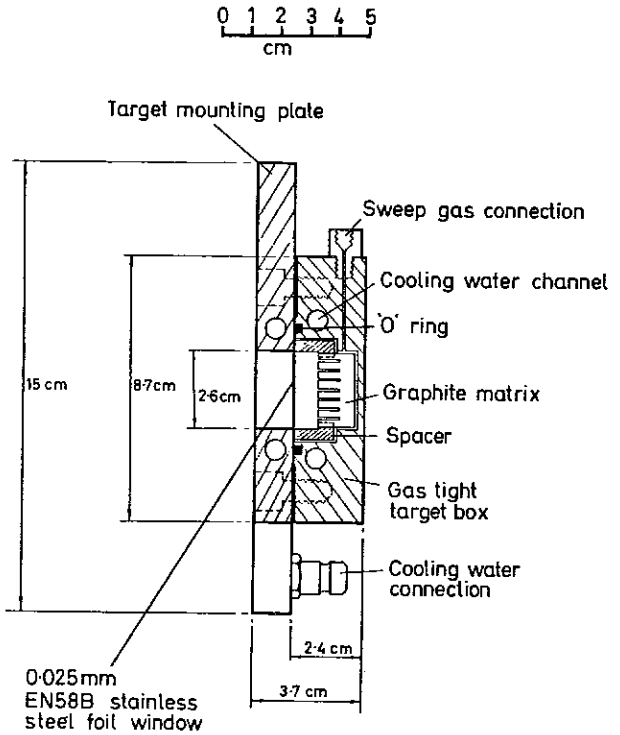

Figure 6.5 Sectional side view of graphite matrix target

molecules previously trapped in the graphite lattice. Of particular importance is the release of $^{13}N_2$.

The purpose of cutting the graphite into a matrix as shown in *Figure 6.4* is to minimize the heat loss by conduction from the area struck by the beam. This increases the release of $^{13}N_2$ from the target since the erosion is more rapid at high temperatures.

† Analytical grade containing 10–50 vpm of residual gases (supplied by Distillers Co. Ltd).

The pressure within the target is maintained at about 0.07 kg cm^{-2} (1 lb in^{-2}) gauge, which is sufficient for transmission of the product nuclei up to a distance of about 50 m without the use of a pump, through gas transmission tubes of 1.5 mm bore. The gas inlet and outlet connections are made using $\frac{1}{16}$ in vacuum fittings. Because of the small gas volume of the target only short pre-bombardment flushing times are necessary.

Since the target effluent is largely CO, its use 'on line' for physiological studies is inadvisable since even if diluted, the output gas would probably still contain an unacceptable proportion of CO.

Target Performance

Table 6.2 shows the performance under typical irradiation and flow rate conditions, of the target shown in *Figure 6.4*. The gas circuit used for these measurements is shown in *Figure 6.14*. Yield measurement was by a 10 ml copper spiral in a high pressure ionization chamber.

The choice of CO_2 as a sweep gas is the result of several initial experiments in which a number of different sweep gases were used in conjunction with a target material consisting of a thin slotted graphite sheet. It was found that the yield at a beam current of 50 μA and a sweep gas flow rate of 1 ml s^{-1} was in the ratio of 1:0.02:0.004 for sweep gases of CO_2, A and H_2 respectively. Also when argon was used the target effluent contained a high proportion ($\sim$ 35 per cent) of ^{41}A from the ^{40}A(d,p)^{41}A reaction.

The yield from the graphite matrix target is quite sensitive to beam power density, it being primarily a function of the amount of target material in the beam strike area reacting with the CO_2 sweep gas. At high power densities, and hence at high temperatures erosion is more rapid. Under normal cyclotron operating conditions the beam strike area is approximately 5 cm^2, the life of the graphite matrix being about 8 h. Experiments using copper and nickel foils embedded in the graphite matrix indicate a temperature of at least 1450°C in the beam strike area using a beam power density of $\sim$ 64 W cm^{-2}.*

The configuration of the graphite matrix may be varied without significantly affecting the rate of recovery of the product nuclei. Experimental bombardments using a graphite block cut only in the horizontal or vertical plane gave good results.

Bombardments at different beam power densities show clearly that high power densities are necessary for good recovery of the product

* At fringe of central area ($\sim$ 3.8 cm × $\sim$ 1.3 cm) in which 50 per cent of the beam is concentrated (see section 2.4, page 41).

nuclei. The yield using a 30 μA concentrated ($\sim$ 1 cm wide × $\sim$ 1 cm high) beam was 1.6 times that obtained with a 60 μA normal (2.5–5 cm × $\sim$ 1 cm) beam distribution, the sweep gas flow rate being the same for both measurements. Similarly the production rate using a 60 μA spread ($\sim$ 7 cm × $\sim$ 1 cm) beam was only about 0.2 of that obtained when a 60 μA normal (2.5–5 cm × $\sim$ 1 cm) beam was used (see section 2.4, page 41).

A major problem when using this type of target system is to find a beam entry window which retains its strength at elevated temperatures. Stainless steel foil (EN58B)† 0.025 mm thick has proved to be very reliable at beams currents up to 70 μA.

The combined efficiency for the graphite matrix target system is about 6 per cent. This value was obtained by comparing the yield of ^{13}N recovered from the graphite matrix with that induced in a solid block of graphite having the same dimensions as that used in the target, under conditions where there were no losses of ^{13}N labelled molecules.

The relationship between beam current and ^{13}N recovery at a constant target pressure and flow rate was investigated, the result being shown in *Figure 6.6*. A normal beam distribution was used with a standard graphite matrix target. Samples of target output gas at various beam currents were also taken for gas chromatographic analysis (*Figure 6.7*). As can be seen the yield increases rapidly in the 40–50 μA region, this being the value of beam current at which erosion of the matrix starts to occur. This is confirmed by the rise in CO production at the same beam current as shown in *Figure 6.7*. Although there is some flattening of the yield/beam characteristic at 70 μA, the maximum yield obtainable in practice is limited by the strength of the target window at beam currents in excess of this value.

Figure 6.8 shows the ^{13}N radioactive concentration at the target output as a function of target output gas flow rate. It will be seen that the radioactive concentration rises rapidly to its maximum value at about 0.8 ml s^{-1}; at flow rates above this it falls slowly as the target effluent is diluted by the excess CO_2 sweep gas (see *Figure 6.9*). The radiochemical purity at the target output under typical irradiation and flow rate conditions is in excess of 97 per cent $^{13}N_2$

† EN58B is an austenitic chromium–nickel steel having rust, acid and heat resisting properties. It is manufactured to B.S. Specification 970: 1955 and may be obtained in thin foil from Goodfellow Metals Ltd, Esher, Surrey, England. Its composition is as follows: C: 0.15% (maximum); Si: 0.20% (minimum); Mn: 2.00% (maximum); Ni: 7.0–10.0% and Cr: 17.0–20.0% (the sum of the nickel and chromium contents shall not be less than 25%); Ti: not less than four times the carbon content; S: 0.045% (maximum); P: 0.045% (maximum).

the most significant contaminant being $HC^{13}N$. This compound, determined both chemically and radio-gas chromatographically comprises about 2.4 per cent of the total target output activity. Traces of $^{13}NO_2$ have also been found, this being detected by absorption in sodium hydroxide solution as described in section 6.2.1. Decay curve analysis also revealed traces of a ^{11}C labelled soluble compound.

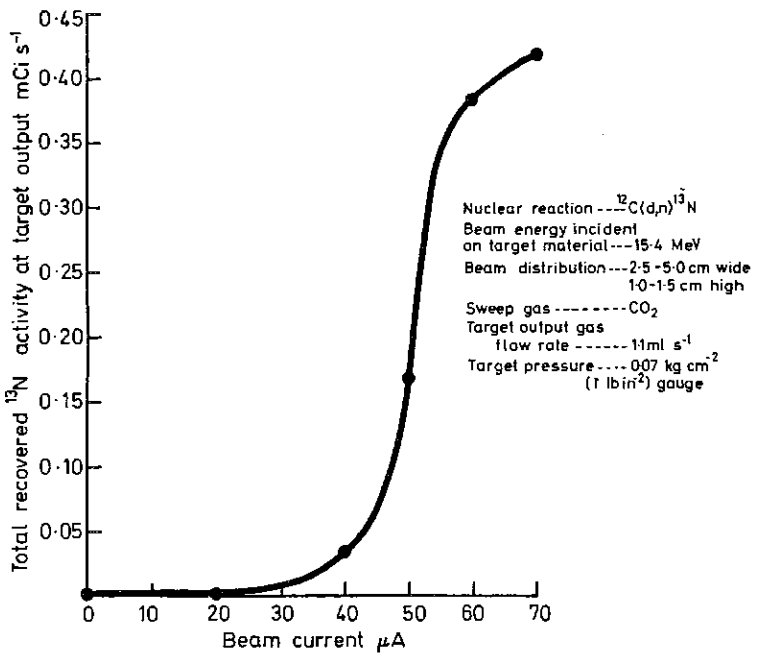

Figure 6.6 Graphite matrix target: total ^{13}N recovery *versus* beam current

The columns used in the radio-gas chromatograph were those described in section 6.2.1. Since $HC^{13}N$ and $^{13}NO_2$ react with a copper spiral, a copper spiral trap was placed before the yield measuring spiral to reduce the risk of inaccurate yield measurements.

It will be seen from Table 6.2 that the production rate is about five times that obtained from the CO_2 target described in section 6.2.1. Thus the graphite matrix target is ideal for the batch-wise production of gas samples having a high activity suitable for bolus inhalation studies. However, $^{13}N_2$ solutions prepared using this target have only about the same radioactive concentration as those

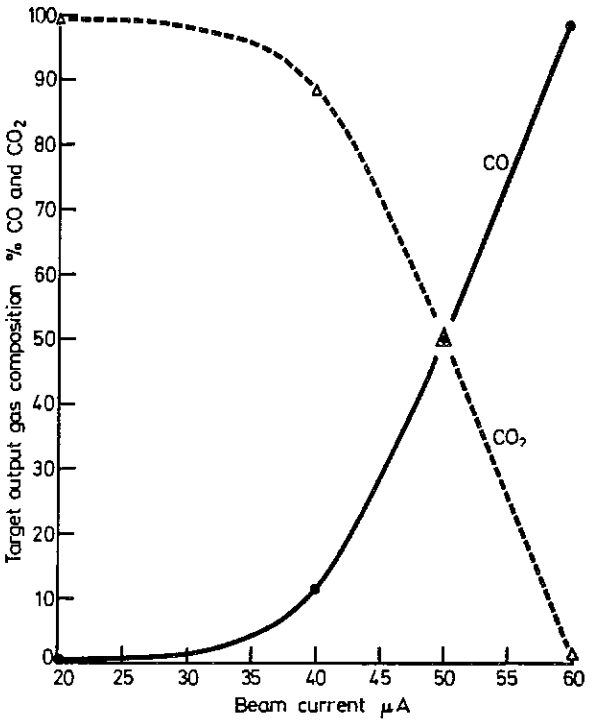

Nuclear reaction	$^{12}C(d,n)^{13}N$
Beam energy incident on target material	15·4 MeV
Beam distribution	2·5–5·0 cm wide 1·0–1·5 cm high
Sweep gas	CO_2
Target output gas flow rate	1·1 ml s^{-1}
Target pressure	0·07 kg cm^{-2} (1 lb in^{-2}) gauge

Figure 6.7 Graphite matrix target: output gas composition *versus* beam current

prepared using the CO_2 gas target. This is largely due to the specific activity of the gas being lower than that obtained from the gas target, adsorbed nitrogen being released from the graphite during erosion. There is also some loss of product nuclei due to decay in transit through the copper oxide furnace used to convert the CO in the target output gas to CO_2 (*Figure 6.14* and Tables 6.3 and 6.4).

Nuclear reaction	$^{12}C(d.n)^{13}N$
Beam current	60μA
Beam energy incident on target material	15·4 MeV
Beam distribution	2·5–5·0 cm wide 1·0–1·5 cm high
Sweep gas	CO_2
Target pressure	0·07 kg cm^{-2} (1 lb in^{-2}) gauge

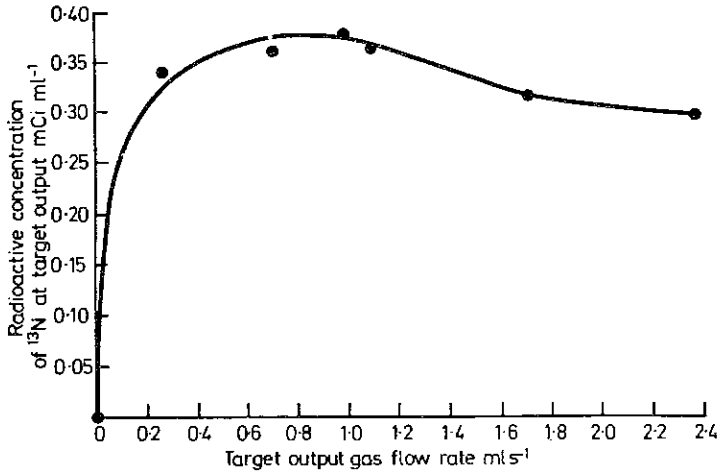

Figure 6.8 Graphite matrix target: radioactive concentration of ^{13}N *versus* output gas flow rate

The operational characteristics of the graphite matrix target may be summarized as follows:

(*a*) Suitable for use with particle accelerators having a concentrated deuteron beam of high current or high energy.

(*b*) Batch-wise gas phase samples of high radioactive concentration are easily prepared.

(*c*) Suitable for the production of $^{13}N_2$ solutions.

(*d*) The target material has to be cut into a matrix.

Procedures for using the graphite matrix target for the batch-wise

preparation of $^{13}N_2$ gas phase and solution samples are fully described in section 6.3.2 (page 200).

Nuclear reaction	$^{12}C(d,n)^{13}N$
Beam current	60μA
Beam energy incident on target material	15·4 MeV
Beam distribution	2·5–5·0 cm wide 1·0–1·5 cm high
Sweep gas	CO_2
Target pressure	0·07 kg cm^{-2} (1 lb in^{-2}) gauge

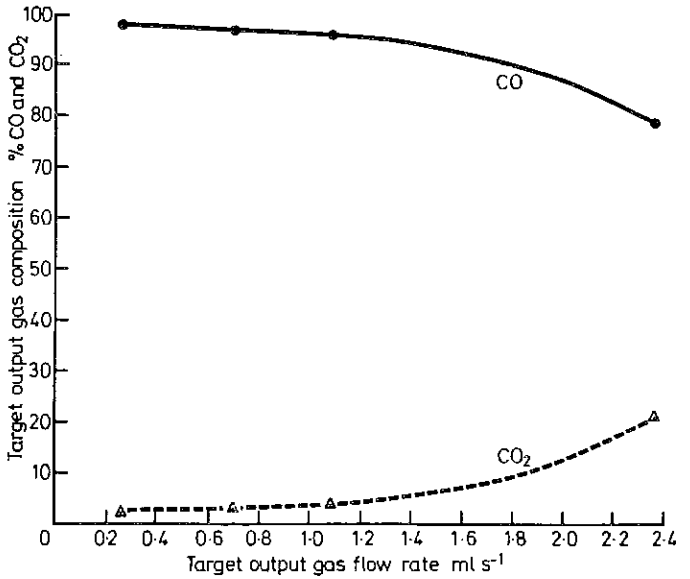

Figure 6.9 Graphite matrix target: output gas composition *versus* output gas flow rate

6.2.3 Target for $^{13}N_2$ Production Using Activated Charcoal as a Target Material

Target Design

If $^{13}N_2$ is required for use in the gas phase only, it may be more convenient to use the activated charcoal target shown in *Figures 6.10* and *6.11*. Designed for use with a 16 MeV deuteron beam it produces ^{13}N by the $^{12}C(d,n)^{13}N$ reaction. To some extent it resembles the graphite matrix target. A gas tight aluminium target box with input and output sweep gas connections houses the target material, in

this case, a layer 13 cm wide, 2.8 cm high and 0.7 cm deep of activated charcoal granules, each about 2-4 mm diameter. This layer is held in position by an aluminium spacing frame incorporating a grid of 1 mm diameter graphite rods positioned vertically and spaced at 4 mm intervals. To prevent small particles of activated charcoal

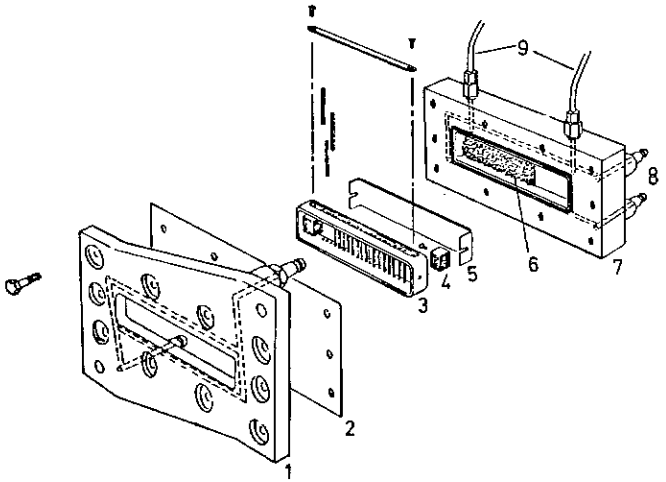

1. Water cooled target mounting plate
2. Air cooled foil window
3. Spacing frame with graphite grid
4. Carbon block
5. Retaining foil
6. Activated charcoal
7. Water cooled gas tight target box
8. Cooling water connections
9. Sweep gas connections

Figure 6.10 Activated-charcoal target for ^{13}NN production

from falling through the grid, a 0.013 mm copper foil is interposed between the grid and the activated charcoal; this foil is secured by a small carbon block at each end of the spacing frame. A 0.050 mm aluminium beam entry window is used. The whole assembly is secured by the aluminium target mounting plate which bolts onto the target box. Both air and water cooling are used, air for the beam

entry window foil and water for the target mounting plate and 'O' ring (*Figures 6.10* and *6.11*). Helium (99.95 per cent) is used as the sweep gas.

The target pressure is maintained at about 0.018 kg cm^{-2} (0.25 lb in^{-2}) gauge, this being sufficient for the transmission of the $^{13}N_2$ up to a distance of about 10 m without the use of a pump, through gas transmission tubes of 1.5 mm bore. If necessary the target pressure may be increased to about 0.07 kg cm^{-2} (1 lb in^{-2}) for longer transmission distances. The sweep gas inlet and outlet con-

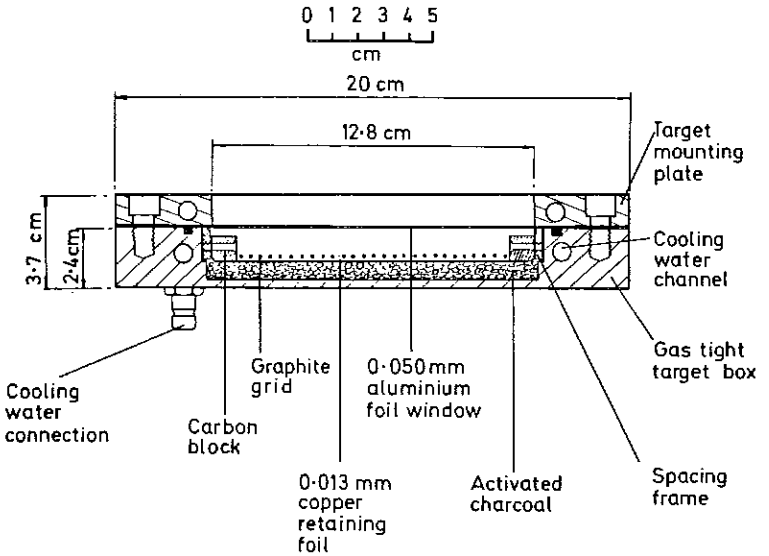

Figure 6.11 Sectional plan view of activated charcoal target

nections are made using $\frac{1}{16}$ in vacuum fittings. Because of the small gas volume of the target only short flushing times are necessary.

Before being placed in the target the activated charcoal is outgassed by heating it to approximately 200 °C, thus releasing any water vapour and adsorbed organic vapours.

During bombardment ^{13}N labelled molecules are removed by the sweep gas from the interstitial spaces in the activated charcoal. Since the characteristics of activated charcoal are somewhat unpredictable it is advisable to try several grades to obtain optimum results. The authors have found that activated charcoal derived from wood is generally better than that derived from animal sources.

Target Performance

The performance of the activated charcoal target under typical irradiation and flow rate conditions is shown in Table 6.2. The gas circuit used for these measurements is shown in *Figure 6.17*. Yield measurement is by a 10 ml copper spiral in a high pressure ionization chamber.

The choice of helium as the sweep gas is the result of several experimental bombardments using different gases. It was found that the yield at the target output was in the ratio of 1.0:0.9:0.6:0.1 for sweep gases of He, A, CH_4 and H_2 respectively. A beam current of 35 μA and a sweep gas flow rate of 1 ml s^{-1} were used for all the measurements.

Unlike the graphite matrix target, the activated charcoal target does not require a high beam power density. Good results are obtained with beam distributions of 2.5 to 11 cm wide and 1 cm high. The use of a concentrated beam is undesirable since it may result in the local melting of the copper retaining foil or even the target window.

The radiochemical purity at the target output under typical irradiation and flow rate conditions is in excess of 99 per cent $^{13}N_2$, $HC^{13}N$ being the principal contaminant. The only other contaminant likely to be present is $C^{15}O$. As the activated charcoal is heated by the beam, air is released giving rise to ^{15}O production by the $^{14}N(d,n)^{15}O$ reaction. These ^{15}O atoms react with the carbon present to form $C^{15}O$. As the bombardment proceeds and the activated charcoal outgases this contaminant gradually disappears.

Since $HC^{13}N$ would react with a copper spiral, a soda lime absorber was placed before the yield measuring spiral to prevent inaccurate yield measurements. Contaminant determination was made radio-gas chromatographically, the columns used being those described in section 6.2.1.

It will be seen from Table 6.2 that the production rate at the target output is lower than that obtainable from either the CO_2 or graphite matrix targets. However, the activated charcoal target can be used 'on line' and is of value where a simple $^{13}N_2$ production system is required. In use it may be necessary to dilute the output gas to avoid non-physiological conditions due to an excess of helium.

The operational characteristics of the activated charcoal target may be summarized as follows:

(*a*) Simple $^{13}N_2$ production for 'on line' applications.

(*b*) The target material requires outgasing, and careful positioning to avoid damage to the graphite grid during assembly.

(*c*) The beam distribution is not critical provided highly concentrated beams are not used.

A production system using the activated charcoal target is fully described in section 6.3.3.

6.3 $^{13}N_2$ PRODUCTION SYSTEMS

6.3.1 $^{13}N_2$ Production System Using a Gas Target

General Principle

This system is designed for the batch-wise production of $^{13}N_2$ labelled gas and solutions of high radioactive concentration. The flow diagram which is of open circuit design is shown in *Figure 6.12*. Carbon dioxide is used as the combined target and sweep gas, the target pressure being maintained at about 0.68 kg cm^{-2} (9.7 lb in^{-2}) above atmospheric pressure. Bombardment is by a 30 μA 16 MeV deuteron beam degraded to approximately 6.3 MeV by a combined beam filter and target window. The $^{12}C(d,n)^{13}N$ reaction takes place, the product at the target output being $^{13}N_2$ with traces of $C^{15}O_2$, $^{13}N_2O$ and $^{13}NO_2$ present as contaminants.

High specific activity $^{13}N_2$ gas samples are obtained by absorbing the CO_2 sweep gas in sodium hydroxide solution, the $^{13}N_2$ being concentrated in a bubble consisting of the accumulated residual permanent gases found in the system. $^{13}N_2$ solutions are prepared by shaking this gas bubble with water or physiological saline. The performance of the system is given in Table 6.3.

Flow Diagram Description

The gas passes through the system as shown in *Figure 6.12*, the target pressure and sweep gas flow rate being determined by the settings of the pressure regulator and flow control valve, and the needle valve. The target output gas is passed through a copper spiral trap to remove trace $^{13}NO_2$ which would otherwise react with the yield measuring spiral. A continuous indication of radioactive concentration is obtained by passing the gas through a copper yield measuring spiral having a volume of approximately 10 ml in a high pressure ionization chamber. The system output gas may be passed either to the sterile assembly, where it is absorbed in sodium hydroxide solution, or directly to waste. At this point an air inlet is introduced so that the scavenge pump will not affect the sweep gas flow rate in the rest of the system.

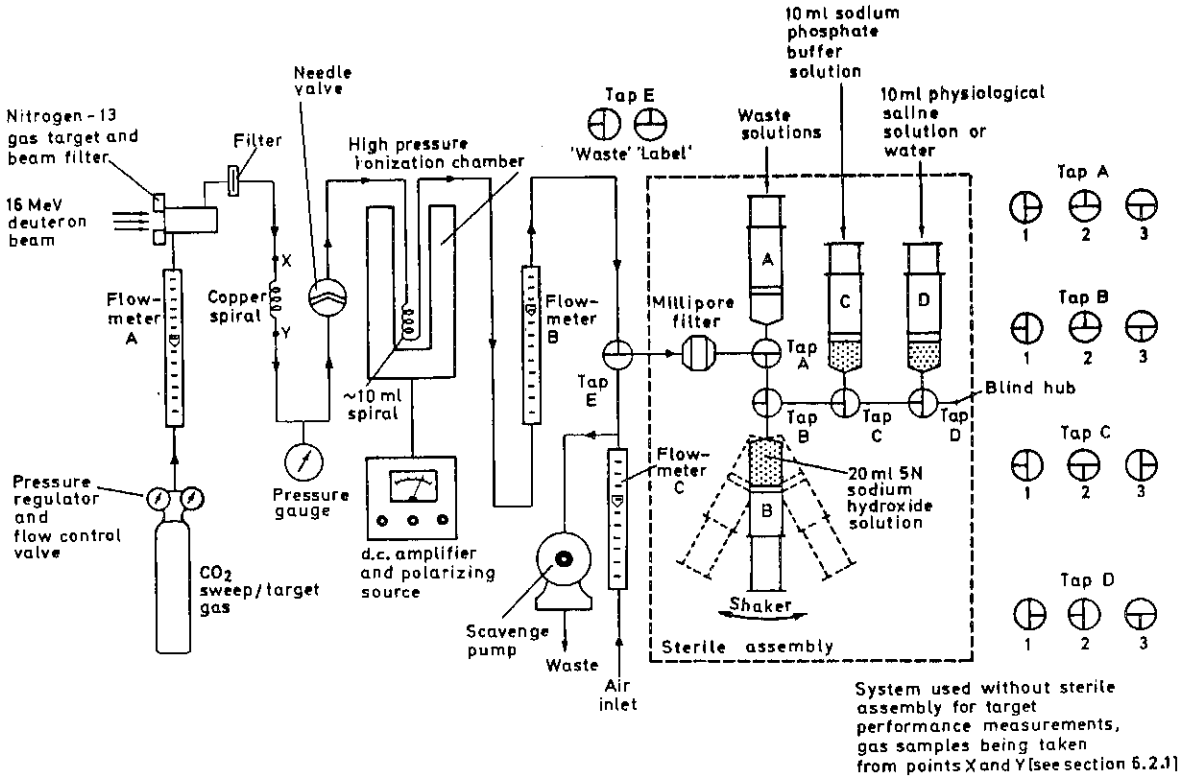

Figure 6.12 ^{13}NN production system using a CO_2 gas target

TABLE 6.3

PERFORMANCE OF A ^{13}NN PRODUCTION SYSTEM USING A CO_2 GAS TARGET

Particle	Deuteron
Nuclear reaction	$^{12}C(d,n)^{13}N$
Current	30 μA
Energy	16.1 MeV
Energy incident on target material	~ 6.3 MeV
Window material and thickness	Al 0.70 mm
Energy loss in window	~ 9.8 MeV
Beam distribution dimensions*	5.0–7.5 cm wide, 1.0–1.5 cm high
Target dimensions (internal)	12.7 cm wide, 2.6 cm high, 25.5 cm deep. Gas vol. 842 ml at 760 mm Hg 20°C
Target pressure	0.68 kg cm^{-2} (9.7 lb in^{-2}) gauge
Sweep/target gas flow rate	1.9 ml s^{-1}
Target output to system output	~ 10 m

Sweep/target gas	*System output at yield measuring spiral*				*Sterile assembly output*				
	Per cent		*Total recovery*		^{13}NN *gas bubble* 760 mm Hg 20°C			^{13}NN *saline solution*	
	^{13}NN	$C^{15}OO$	mCi s^{-1}	mCi ml^{-1} 760 mm Hg 20°C	ml	mCi ml^{-1}	mCi mM^{-1} N_2	ml	mCi ml^{-1}
CO_2	> 99	< 1	0.080	0.042	0.5	25	1.9×10^4	10	0.20
Tolerance %	±1	±50	±15		±50			±5	±50
Remarks					Values at end of 5 min NaOH absorption period			Radioactive concentration 5 min after end of NaOH absorption period	

* See section 2.4.

Target, Sweep/Target Gas and Irradiation Conditions

The target is of the type shown in *Figure 6.2* and described in sections 5.2 (page 126) and 6.2.1 (page 173). The combined 0.7 mm aluminium beam filter and target window degrades the 16 MeV deuteron beam to approximately 6.3 MeV. The normal target working pressure is 0.68 kg cm^{-2} (9.7 lb in^{-2}) gauge. Analytical grade CO_2 (10–50 vpm residual gases) is used as the sweep/target gas, a normal flow rate being 1.9 ml s^{-1}. Typical irradiation conditions are given in Table 6.3.

Copper Spiral Trap

The trap for the removal of the $^{13}NO_2$ consists of a 2.3 m length of 3 mm OD, 1.7 mm bore copper tubing wound into a 6 cm diameter spiral. No preparation of the internal surface is necessary. This trap is used at ambient temperature.

Flowmeters and Filters

The flowmeters used in the system are of the variable area type. As this type of flowmeter is pressure dependent the sweep gas flow rate is always determined from flowmeter B since this is virtually at atmospheric pressure. Flowmeter A reads low due to the elevated pressure at this point in the system. Flowmeters A and B have a range of 5–150 ml min^{-1} (0.083–2.5 ml s^{-1}) (CO_2) at 760 mm Hg and 18 °C. The flow rate at the air inlet should not be less than about 100 times that in the rest of the system. Thus the scavenging gas flowmeter C has a range of 2–20 l min^{-1} (air) at 760 mm Hg and 18 °C.

The target output filter is of the type described in section 3.3; the filter on the sterile assembly is a Millipore Millex disposable filter unit of 25 mm diameter having a pore size of 0.22 μm.

Gas Transmission Tubes

The system is connected with 2.2 mm diameter, 1.5 mm bore stainless steel tube, and 3.2 mm diameter, 2.0 mm bore nylon tube where flexible connections are necessary. The distance from the target to the processing equipment is approximately 10 m. Longer distances of up to 100 m may be used provided the target pressure is maintained at 0.68 kg cm^{-2} (9.7 lb in^{-2}) gauge. To maintain the measuring spiral and flowmeter B at approximately atmospheric pressure, long lengths (> 2m) of small bore (1.5 mm) tube between the spiral input and flowmeter C should be avoided.

Sterile Assembly

The sterile assembly consists of a small frame on which are mounted four syringes connected by a suitable arrangement of taps. The frame is so constructed that it attaches to a unit containing a small variable speed shaking machine which oscillates the syringe

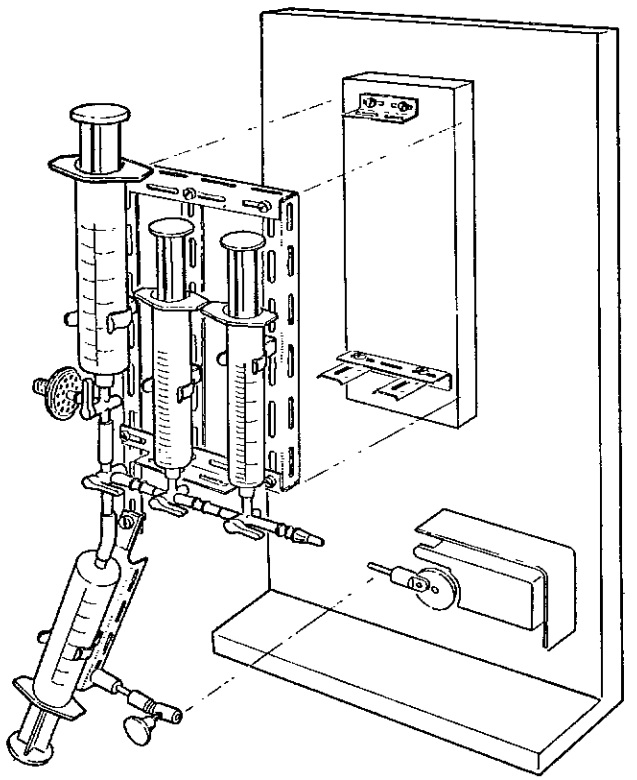

Figure 6.13 (a) Sterile assembly for use with ^{13}NN production systems using CO_2 gas and graphite matrix targets

containing the sodium hydroxide solution (*Figure 6.13 (a)*). The rate of the oscillation determines to some extent the rate of absorption of the CO_2 sweep gas. The other syringes contain waste solutions (collected during preparation of the assembly), sodium phosphate buffer solution and the water or physiological saline to be labelled. The assembly is prepared under sterile conditions using disposable

syringes and taps (*Figure 6.13 (b)*). Great care is taken to exclude all gas bubbles (see Appendix 7).

Each sterile assembly is used for the preparation of one labelled solution or gas sample. By having several interchangeable assemblies

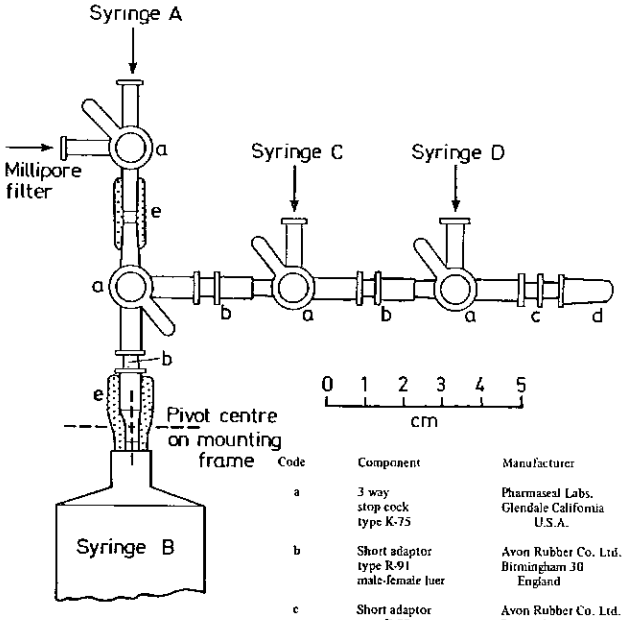

Code	Component	Manufacturer
a	3 way stop cock type K-75	Pharmaseal Labs. Glendale California U.S.A.
b	Short adaptor type R-91 male-female luer	Avon Rubber Co. Ltd. Birmingham 30 England
c	Short adaptor type R-93 male-male luer	Avon Rubber Co. Ltd. Birmingham 30 England
d	Blind hub luer	Southern Syringe Services Ltd. London N 21 2RX England
e	Silicone rubber 7·5 mm O D 3·0 mm Bore (N.B. Sectional view)	Esco Rubber Ltd. London W1N 5AB England
Syringes A & B	50 cc Plastipak centre nozzle luer-lok	Becton. Dickinson & Co. Rutherford N.J. U.S.A.
Syringes C & D	30 cc Plastipak centre nozzle luer-lok	Becton, Dickinson & Co. Rutherford N.J. U.S.A.

Figure 6.13 (b) Arrangement of fittings used on sterile assembly

available it is possible to prepare gas samples or solutions as required.

Production Techniques and System Performance

Before using the system an appropriate number of sterile assemblies are prepared under sterile conditions. Disposable components

are used throughout. Two sizes of syringe are used: 50 ml for A and B; 30 ml for C and D. The nylon taps A, B, C and D are spaced using nylon luer connectors (*Figure 6.13 (b)*). It is necessary to keep the distances between taps B, C and D as short as possible since the residual high activity gas bubble can easily be of a volume comparable to the syringe interconnecting volume. To permit oscillation of syringe B, the connection between this syringe and tap B is a short piece of sterile thick-walled small bore silicone rubber tube.

The syringes are filled with the solutions as shown in *Figure 6.12*, the initial volumes being about 30 per cent greater than those stated. It is essential that all gas bubbles are removed from the syringes before they are connected, and then from the interconnecting taps and tubes. Syringe A, initially empty, is first connected to receive the excess waste solutions from the other syringes as the assembly is cleared of air bubbles. Syringe B is then connected and the excess NaOH solution, together with any air bubbles is transferred to syringe A, taps A and B both being in position 1. Syringe C is then connected with tap C in position 1. Tap B is turned to position 2 and the excess sodium phosphate buffer solution transferred to syringe A with any bubbles in the interconnection between taps B and C. Syringe D is then connected with tap D in position 1. The unused connection on tap D is filled from syringe D and a blind hub attached. Taps C and D are both turned to position 2, and the excess water or physiological saline transferred to syringe A together with any air in the interconnection between taps C and D. Taps A, B and C are finally turned to positions 1, 1 and 1 respectively, tap D being left in position 2. The Millipore filter is added and the sterile assembly is ready for use by attaching it to the variable speed shaking machine and connecting the system output (tap E) to the input of the Millipore filter.

To prevent liquid reaching the Millipore filter it is important that a positive pressure is applied to the input of this component before tap A is manipulated. If the filter should become wet it may impede the gas flow. (If desired a small liquid trap may be placed between the Millipore filter and tap A, but this requires sterilization, careful flushing during operation and constitutes an unnecessary active 'dead volume'.)

Before bombardment the scavenge pump is started and air removed from the system by flushing to waste for 3 h with the sweep gas flowing at about 2.5 ml s^{-1}. After flushing is complete and having checked the target pressure, sweep gas flow rate and yield monitor, the irradiation is started. As the temperature of the gas increases during bombardment the target pressure increases and

may need re-adjusting using the needle valve. A steady state of output activity is reached about 17 min after the start of bombardment at the stated irradiation and flow rate conditions.

If it is necessary to increase the production rate the beam current is increased (*Figure 6.3*). The amount of this increase is limited by the beam distribution since the beam filter will not withstand a concentrated high current beam. However, provided the beam distribution is as given in *Figure 6.3* it is possible to operate at up to 50 μA with no adverse effects on the filter. To reduce the production rate the beam current is reduced.

Since a relatively high target pressure is used the system is fairly sensitive to changes in beam current; such changes cause variations in the target pressure which are rapidly reflected as variations in the sweep gas flow rate and hence the rate of recovery of product nuclei. However, this is not usually a problem unless the beam current is severely fluctuating, and one does have the advantage that it is possible to obtain a usable yield in as little as 17 min from the start of bombardment, provided the system has been flushed out and the sweep gas is flowing. Since this system is used for batch-wise production it is convenient to leave the sweep gas flowing and use the cyclotron only when necessary. Such an arrangement can lead to a more economic use of cyclotron running time.

When the production rate reaches a steady state value $^{13}N_2$ gas phase samples or solutions may be prepared as follows.

Tap E (*Figure 6.12*) is turned to 'label' and then tap A to position 2. The system output gas is allowed to pass into syringe A thus flushing air from the Millipore filter and the connecting tube between taps E and A. When flushing is complete (10–20 ml gas) tap A is turned to position 3 and the gas passed to syringe B. It is allowed to accumulate until a CO_2 bubble of about 10 ml is formed above the NaOH solution. The variable speed shaking machine is then started and its speed adjusted until the rate of absorption of the CO_2 is sensibly constant. This is ascertained by observation of flowmeter B and if necessary, the volume of the gas bubble in syringe B.

It is important that the rate of absorption is neither too high nor too low. If it is too high the bubble may disappear altogether causing the NaOH solution to be sucked back into the Millipore filter; if too low the plunger of syringe B may be forced to its maximum extension due to the large gas bubble which will be formed. In practice there is a wide tolerance in shaking speed between these two conditions and it is not difficult to achieve a fairly constant rate of absorption.

Shaking is continued for 5 min, tap E then being turned to the 'waste' position. If the bubble above the NaOH solution is sufficiently small ($\sim$ 0.5 ml) the shaking machine is stopped; if not, oscillation of syringe B is continued until the gas bubble is of this volume. (It should be noted that if the strength or volume of the NaOH solution is less than that shown in *Figure 6.12*, premature exhaustion may occur resulting in a large gas bubble, the volume of which cannot be reduced.) Tap B is then turned to position 3 and the bubble transferred to syringe C, care being taken to avoid the transfer of any NaOH. The sodium phosphate buffer solution (which neutralizes any traces of NaOH which may have been carried over with the bubble) is next ejected into syringe B leaving the bubble in syringe C. Tap C is turned to position 3 and the bubble is finally transferred to syringe D. Tap D is turned to position 3 and syringe D together with tap D is removed from the sterile assembly for measurement in an ionization chamber. A typical bubble radioactive concentration is 25 mCi ml^{-1} (Table 6.3).

If the $^{13}N_2$ is required in the gas phase the excess water or physiological saline is ejected from syringe D, leaving the high activity bubble.

If a $^{13}N_2$ solution is required, the above procedure is carried out including the removal of syringe D and its tap from the sterile assembly. After ionization chamber measurement this syringe is shaken vigorously for 90 s to obtain optimum solution activity. After allowing the phases to separate the bubble is ejected through a small bore needle leaving a solution having a typical radioactive concentration of 0.2 mCi ml^{-1} (Table 6.3).

To prevent a loss of activity, care is taken to ensure that no air (or any other gas) comes into contact with the solution after it has been prepared.

Since $^{13}N_2$ solutions are usually administered by intravenous injection it is essential that strict quality control procedures are adopted. The pH of a labelled solution is always tested to ensure that it has remained unchanged, using a suitable indicator paper. The solution must also remain sterile, pyrogen free and isotonic. For reliable physiological measurements at least 99 per cent of the solution activity must be present as ^{13}N labelled molecular nitrogen. This is confirmed by making a typical $^{13}N_2$ solution and recording its activity as the $^{13}N_2$ is washed out of solution by bubbling nitrogen through it at about 250 ml min^{-1}. If no contamination is present the washout curve falls to the base line. In practice it falls to between 0.01 and 0.1 per cent of the original solution activity. Gamma ray spectrometry and decay curve analysis of this con-

taminant show that it contains a ^{13}N labelled soluble compound. A typical measurement of this type is shown in *Figure 6.16*. It will be seen from Table 6.3 that the specific activity of the $^{13}N_2$ gas bubble obtained using this system is the order of 1.9×10^4 mCi $mM^{-1}N_2$. Comparison with Table 6.4 shows that this is far higher than that obtained using the graphite matrix target. The reason for this high specific activity is that the primary sources of N_2 contamination are limited to the analytical grade sweep gas and desorption from the internal surfaces of the target and gas transmission tubes.

Gas chromatographic analysis of a typical gas bubble (collected at the end of a 5 min NaOH absorption period) shows that it consists largely of CO_2 with N_2, O_2 and CO also present, the partial pressure of the N_2 being about 24 mm Hg at 20°C. It is of interest to note that a typical bubble collected with the beam switched off shows an absence of CO. This indicates that under bombardment conditions some of the CO_2 sweep gas is being radiolysed to CO.

Although the specific activity of the $^{13}N_2$ gas bubble is higher than that obtained using the graphite matrix target, its total activity is lower. Since both parameters affect the amount of activity passing into solution, similar solution radioactive concentrations are achieved whichever target system is used.

The amount of activity dissolved in the NaOH solution at the end of the 5 min shaking period is about 1 mCi. Most of this is $^{13}N_2$, the remainder being ^{13}N labelled soluble compounds.

For systems where the irradiation parameters differ widely from those shown in Table 6.3, care should be taken to investigate the stability of the system output gas composition and purity of solutions under all anticipated operating conditions.

6.3.2 $^{13}N_2$ Production System Using a Graphite Matrix Target

General Principle

This system is designed for the batch-wise production of $^{13}N_2$ labelled gas and solutions of high radioactive concentration. The flow diagram which is of open circuit design is shown in *Figure 6.14*. A graphite matrix target is used with carbon dioxide as the sweep gas. During bombardment most of the CO_2 is converted to CO by reaction with the target material. The target pressure is maintained at about 0.07 kg cm^{-2} (1 lb in^{-2}) above atmospheric pressure. Bombardment is by a concentrated 60 μA deuteron beam resulting in the $^{12}C(d,n)^{13}N$ reaction. The product at the target output is $^{13}N_2$ with traces of $HC^{13}N$ and $^{13}NO_2$ present as contaminants.

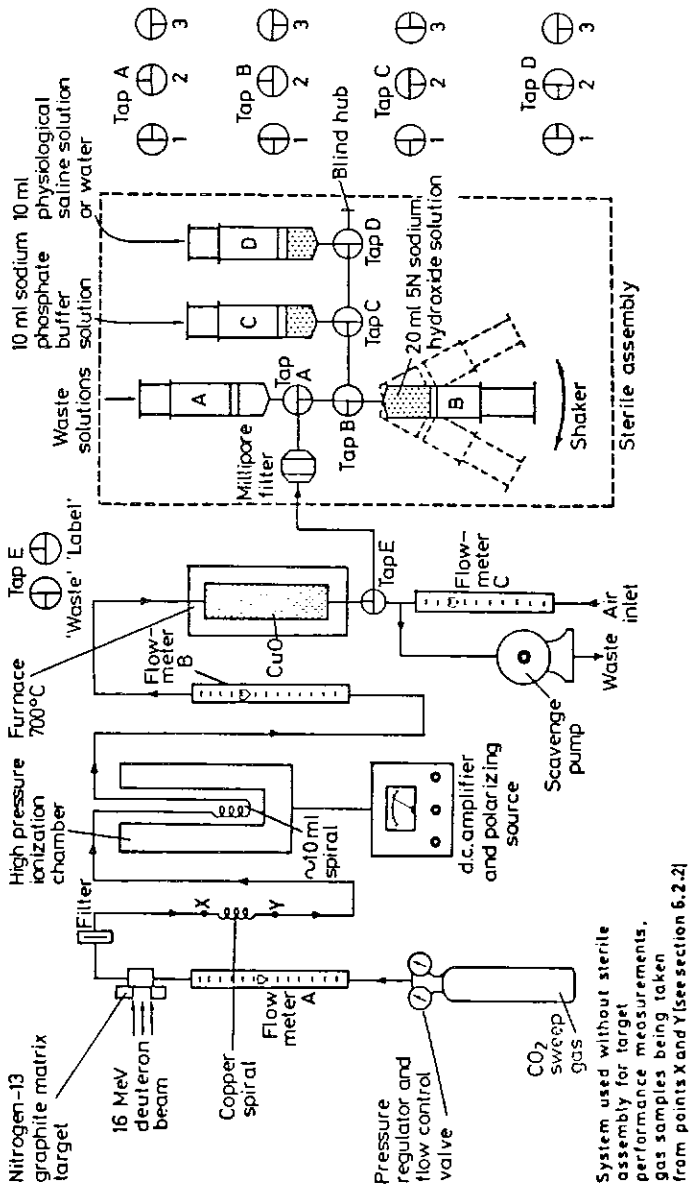

Figure 6.14 ^{13}NN production system using a graphite matrix target

TABLE 6.4

PERFORMANCE OF A ^{13}NN PRODUCTION SYSTEM USING A GRAPHITE MATRIX TARGET

Particle	Deuteron
Nuclear reaction	$^{12}C(d,n)^{13}N$
Current	60 μA
Energy	16.1 MeV
Energy incident on target material	15.4 MeV
Window material and thickness	Stainless steel EN58B 0.025 mm
Energy loss in window	0.7 MeV
Beam distribution dimensions*	2.5–5.0 cm wide, 1.0–1.5 cm high
Total beam power deposited in graphite	~ 920 W
Minimum beam power density at graphite†	~ 64 W cm^{-2}
Target dimensions (internal)	13.9 cm wide, 2.6 cm high, 2.2 cm deep. Gas vol. ~ 35 ml at 760 mm Hg 20°C
Graphite matrix dimensions	13.7 cm wide, 2.5 cm high, 1.3 cm thick. Surface cut into matrix of prisms 3 mm × 3 mm × 8 mm deep.
Target pressure	0.07 kg cm^{-2} (1 lb in^{-2}) gauge
Sweep gas flow rate	1.1 ml s^{-1}
Target output to system output	~ 10 m

Sweep gas	*System output at yield measuring spiral*				*Sterile assembly output*				
	Per cent		*Total recovery*		^{13}NN *gas bubble* 760 mm Hg 20°C			^{13}NN *saline solution*	
	^{13}NN	HC^{13}N	mCi s^{-1}	mCi ml^{-1} 760 mm Hg 20°C	ml	mCi ml^{-1}	mCi mM^{-1} N_2	ml	mCi ml^{-1}
CO_2	> 99	< 0.1	0.39	0.35	1.8	24	1.4×10^3	10	0.21
Tolerance %	±1	±50	±15		±50			±5	±50
Remarks					Values at end of 5 min NaOH absorption period			Radioactive concentration 5 min after end of NaOH absorption period	

* See section 2.4.
† At fringe of central area (~ 3.8 cm × ~ 1.3 cm) in which 50 per cent of beam is concentrated (see section 2.4).

The CO content of the target output gas is oxidized to CO_2 by a copper oxide furnace at 700°C.

High specific activity $^{13}N_2$ gas samples are obtained by absorbing the CO_2 in sodium hydroxide solution, the $^{13}N_2$ being concentrated in a bubble consisting of the accumulated residual permanent gases found in the system. $^{13}N_2$ solutions are prepared by shaking this gas bubble with water or physiological saline. The performance of the system is given in Table 6.4.

Flow Diagram Description

The gas passes through the system as shown in *Figure 6.14*, the target pressure and sweep gas flow rate being determined by the settings of the pressure regulator and flow control valve. The target output gas is passed through a copper spiral trap to remove trace $^{13}NO_2$ and HC^{13}N which would otherwise react with the yield measuring spiral. A continuous indication of radioactive concentration is obtained by passing the gas through a copper yield measuring spiral having a volume of approximately 10 ml in a high pressure ionization chamber. As the gas passes through the copper oxide furnace the CO is oxidized to CO_2. The system output gas may be passed either to the sterile assembly where it is absorbed in sodium hydroxide solution, or directly to waste. At this point an air inlet is introduced so that the scavenge pump will not affect the sweep gas flow rate in the rest of the system.

Target, Sweep Gas and Irradiation Conditions

The target is of the type shown in *Figure 6.4* and described in section 6.2.2. A 0.025 mm EN58B stainless steel beam entry window is used. The normal target working pressure is 0.07 kg cm^{-2} (1 lb in^{-2}) gauge. Analytical grade CO_2 (10–50 vpm residual gases) is used as the sweep gas, a normal flow rate at the target output under bombardment conditions being 1.1 ml s^{-1}. Typical irradiation conditions are given in Table 6.4.

Copper Spiral Trap

The trap for the removal of the HC^{13}N and $^{13}NO_2$ consists of a 2.3 m length of 3 mm OD, 1.7 mm bore copper tubing wound into a 6 cm diameter spiral. No preparation of the internal surface is necessary. This trap is used at ambient temperature.

Flowmeters and Filters

The flowmeters used in the system are of the variable area type. Because of the chemical reaction taking place in the target during

bombardment the flow rate of gas at the target output can be up to twice the input flow rate. At the bombardment conditions stated in Table 6.4, the target output gas composition is almost entirely CO (*Figure 6.7*). Thus flowmeters A and B are calibrated for CO_2 and CO respectively and have a range of 5–150 ml min^{-1} (0.083–2.5 ml s^{-1}) at 760 mm Hg and 18 °C. Since the flow rate at the air inlet should not be less than about 100 times that in the rest of the system, the scavenging gas flowmeter C has a range of 2–20 l min^{-1} (air) at 760 mm Hg and 18 °C.

The target output filter is of the type described in section 3.3; the filter on the sterile assembly is a Millipore Millex disposable filter unit of 25 mm diameter having a pore size of 0.22 μm.

Gas Transmission Tubes

The system is connected with 2.2 mm diameter, 1.5 mm bore stainless steel tube, and 3.2 mm diameter, 2.0 mm bore nylon tube where flexible connections are necessary. The distance from the target to the processing equipment is approximately 10 m. Longer distances of up to 100 m may be used provided the target pressure does not exceed approximately 0.07 kg cm^{-2} (1 lb in^{-2}) gauge.

Copper Oxide Furnace

The copper oxide furnace at 700 °C converts the target output CO to CO_2 by the following reaction:

$$CO + CuO \xrightarrow{700\,^{\circ}C} CO_2 + Cu$$

To avoid 'streaming' which could occur with a horizontal furnace, a vertical muffle furnace is used (see section 3.5, page 65). A silica tube contains the copper oxide which is formed *in situ* by the oxidation of a roll of copper gauze 23 cm high and 2.5 cm diameter. In use the copper oxide becomes reduced to copper, this process taking place in not less than 1.5 h at the flow rate stated in Table 6.4. Re-oxidation is carried out *in situ* at 700 °C by passing oxygen into the furnace at about 1 ml s^{-1} until the copper is fully re-oxidized. This takes about 7 h after which the oxygen appears at the furnace output; its presence may be detected using a simple water displacement indicator (*Figure 6.15*). If a flow rate higher than about 1 ml s^{-1} is used in an attempt to obtain rapid re-oxidation, the process is inefficient, the result being premature exhaustion of the CuO when it is used and hence a large CO gas bubble which cannot be absorbed by the NaOH solution.

It is essential that air is not used for re-oxidation since nitrogen

may be adsorbed[14] which could later be released and give rise to an undesirably large residual gas bubble.

Sterile Assembly

The sterile assembly consists of a small frame on which are mounted four syringes connected by a suitable arrangement of taps. The frame is so constructed that it attaches to a unit containing a

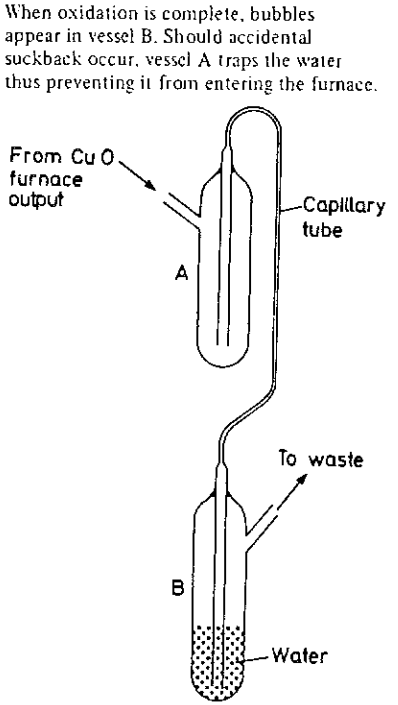

Figure 6.15 Water displacement indicator for CuO furnace re-oxidation process

small variable speed shaking machine which oscillates the syringe containing the sodium hydroxide solution (*Figure 6.13*). The rate of oscillation determines to some extent the rate of absorption of the CO_2 sweep gas. The other syringes contain waste solutions (collected during preparation of the assembly), sodium phosphate buffer solution and the water or physiological saline to be labelled. The assembly is prepared under sterile conditions using disposable syringes and taps. Great care is taken to exclude all gas bubbles.

Each sterile assembly is used for the preparation of one labelled solution or gas sample. By having several interchangeable assemblies available it is possible to prepare gas samples or solutions as required.

Production Techniques and System Performance

An appropriate number of sterile assemblies are first prepared as described in section 6.3.1. After ascertaining that the furnace is at 700 °C and the reagent fully oxidized, the scavenge pump is started and air removed from the system by flushing to waste for half an hour with the sweep gas flowing at about 2.5 ml s^{-1} as indicated by flowmeter A. When flushing is complete the target input flow rate is set to approximately 0.5 ml s^{-1} as indicated by flowmeter A, the yield monitor checked and the bombardment started using the irradiation conditions given in Table 6.4. A steady state of output activity is reached about 45 min after the start of bombardment at the stated irradiation and flow rate conditions. If necessary the radioactive concentration is maximized by adjusting the flow control valve until the target output flow rate is between 0.8 and 1.1 ml s^{-1} as indicated by flowmeter B (*Figure 6.8*).

It will be seen from *Figure 6.6* that the yield changes rapidly with beam current below about 55 μA at the stated beam distribution. It is therefore advisable to maintain a beam current of between 55 and 70 μA; below 55 μA the yield can be variable, whilst above 70 μA there is a risk of target window failure. Since a low target pressure is used the system is relatively insensitive to short-term fluctuations in beam current. This, together with the thermal characteristics of the target leads to a fairly steady production rate once equilibrium conditions are established.

The sterile assembly is identical to that used with the CO_2 gas target. Thus when the production rate reaches a steady state value, $^{13}N_2$ gas phase samples and solutions may be prepared as described in section 6.3.1, the furnace output tap E being turned to its 'label' position. It is found that with this target system it is difficult to reduce the volume of the residual gas bubble to less than 1–2 ml since air previously trapped in the graphite matrix is released as the erosion takes place. Thus the specific activity of the bubble is much lower than that obtained using the CO_2 gas target, it being about 1.4×10^3 mCi $mM^{-1}N_2$. However, the total bubble activity is higher (even though there is a loss of activity by decay in the CuO furnace) which results in the production of $^{13}N_2$ gas samples of an activity suitable for a number of physiological applications including bolus inhalation studies. $^{13}N_2$ solutions having a radioactive concentra-

tion of 0.21 mCi ml^{-1} are readily prepared using this gas bubble (Table 6.4).

Gas chromatographic analysis of a typical gas bubble shows that it consists of N_2 and O_2, the partial pressures being approximately 570 mm Hg and 190 mm Hg respectively at 20 °C. In some analyses traces of CO_2 are also found. The high O_2 content is thought to

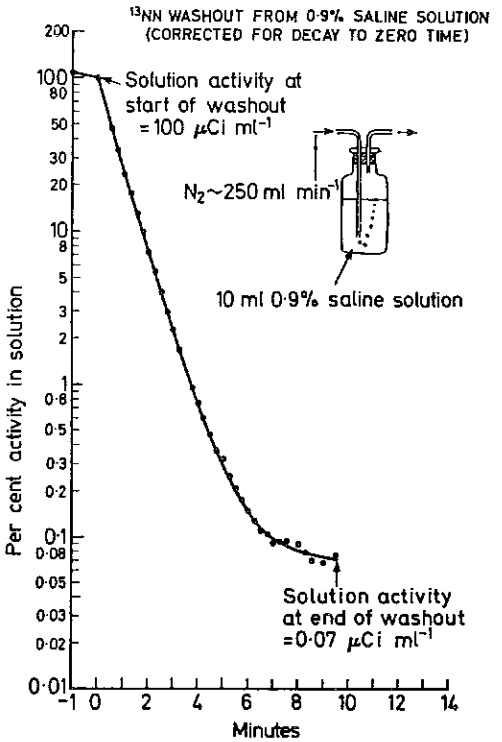

Figure 6.16 ^{13}NN solution washout curve

arise from excess oxygen desorbed from the CuO and the not insignificant partial pressure of O_2 over the CuO at 700 °C[1].

The amount of activity dissolved in the NaOH solution at the end of the 5 min shaking period is about 1 mCi. This consists of approximately 99 per cent $^{13}N_2$, the remainder being ^{13}N and ^{11}C labelled soluble compounds.

The quality control procedures are identical to those described in section 6.3.1. The solution washout curve (*Figure 6.16*) indicates a contaminant level between 0.01 and 0.1 per cent of the original

solution activity. Gamma ray spectrometry and decay curve analysis of this contaminant show that it contains a ^{13}N labelled soluble compound.

For systems where the irradiation parameters differ widely from those shown in Table 6.4, care should be taken to investigate the stability of the system output gas composition and purity of solutions under all anticipated operating conditions.

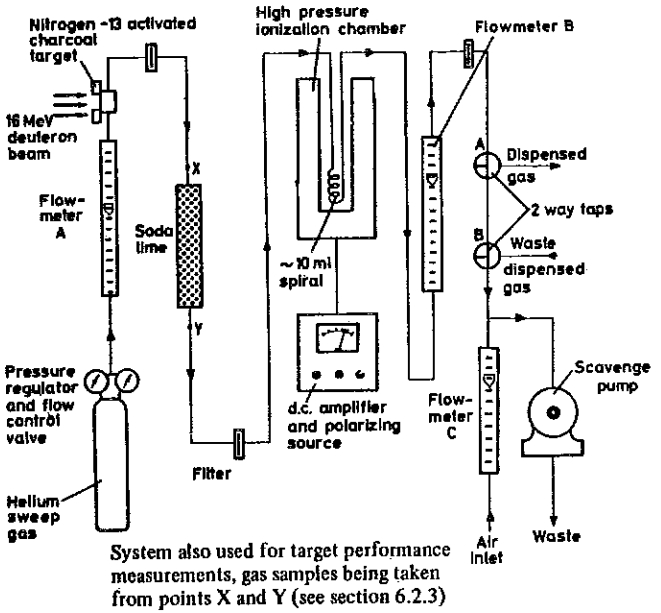

Figure 6.17 ^{13}NN production system using an activated charcoal target

6.3.3 $^{13}N_2$ Production System Using an Activated Charcoal Target

General Principle

This system is designed for the continuous production of $^{13}N_2$ for use in the gas phase using activated charcoal as the target material. The flow diagram which is of open circuit design is shown in *Figure 6.17*. Helium is used as the sweep gas, the target pressure being maintained at about 0.018 kg cm^{-2} (0.25 lb in^{-2}) above atmospheric pressure. Bombardment is by a 35 μA 16 MeV

deuteron beam resulting in the $^{12}C(d,n)^{13}N$ reaction. The product at the target output is $^{13}N_2$ with traces of $HC^{13}N$ and $C^{15}O$ present as contaminants. Soda lime is used to absorb the $HC^{13}N$. The performance of the system is given in Table 6.5.

Flow Diagram Description

The gas passes through the system as shown in *Figure 6.17*. The target pressure and sweep gas flow rate are determined by the settings

TABLE 6.5

PERFORMANCE OF A ^{13}NN PRODUCTION SYSTEM USING AN ACTIVATED CHARCOAL TARGET

Particle	Deuteron
Nuclear reaction	$^{12}C(d,n)^{13}N$
Current	35 μA
Energy	16.1 MeV
Energy incident on target material	15.2 MeV
Window material and thickness	Al 0.05 mm + Cu 0.0125 mm
Energy loss in windows	0.9 MeV
Beam distribution dimensions (see section 2.4)	2.5–5.0 cm wide, 1.0–1.5 cm high
Target dimensions (internal)	13.5 cm wide, 3.0 cm high, 2.0 cm deep
Activated charcoal dimensions	13 cm wide, 2.8 cm high, 0.7 cm deep
Target pressure	0.0175 kg cm^{-2} (0.25 lb in^{-2}) gauge
Sweep gas flow rate	1 ml s^{-1}
Target output to system output	~ 10 m

Helium sweep gas	*Per cent of total recovered activity*			^{13}N *recovery*	
	^{13}NN	$HC^{13}N$	$C^{15}O$	mCi s^{-1}	mCi ml^{-1} 760 mm Hg 20°C
Target output	> 99	< 1	Trace†	0.053	0.053
System output*	> 99	< 0.1	Trace†	0.051	0.051
Tolerance %	> 90 ..... ±1 < 10 ..... ±50			±15	

* Target output gas passed through column of soda lime 16 cm long and 2.5 cm diameter.
† Present only during early part of bombardment as activated charcoal outgases.

of the pressure regulator and flow control valve, the target effluent being passed through a soda lime absorber to remove the $HC^{13}N$ contaminant. A continuous indication of radioactive concentration is obtained by passing the gas through a copper yield measuring spiral having a volume of about 10 ml, in a high pressure ionization chamber. The system output gas may be dispensed either continuously or batch-wise from tap A. If continuous dispensing is

required the waste dispensed gas may be returned to the system using tap B. At this point an air inlet is included so that the scavenge pump will not affect the sweep gas flow rate in the rest of the system.

Target, Sweep Gas and Irradiation Conditions

The target is of the type shown in *Figure 6.10* and described in section 6.2.3. A 0.05 mm aluminium foil beam entry window is used. The target working pressure may be any value between 0.018 kg cm^{-2} (0.25 lb in^{-2}) and 0.07 kg cm^{-2} (1 lb in^{-2}) above atmospheric pressure.

The sweep gas is helium of 99.95 per cent purity, a normal flow rate being 1 ml s^{-1}. Typical irradiation conditions are given in Table 6.5.

Soda Lime Absorber

A column of soda lime 16 cm long and 2.5 cm diameter (*Figure 3.6*) is sufficient for the removal of the $HC^{13}N$ contaminant.

Flowmeters and Filters

The flowmeters used in the system are of the variable area type. Since this type of flowmeter is pressure dependent the sweep gas flow rate is always determined from flowmeter B since this is virtually at atmospheric pressure. Flowmeter A reads slightly low due to the elevated pressure at this point in the system. Flowmeters A and B have a range of 5–150 ml min^{-1} (0.083–2.5 ml s^{-1}) (He) at 760 mm Hg and 18 °C. Since the flow rate at the air inlet should not be less than about 100 times that in the rest of the system the scavenging gas flowmeter C has a range of 2–20 l min^{-1} (air) at 760 mm Hg and 18 °C.

The filters at the output of the target and soda lime absorber are of the type described in section 3.3.

Gas Transmission Tubes

The system is connected with 2.2 mm diameter, 1.5 mm bore stainless steel tube and 3.2 mm diameter, 2.0 mm bore nylon tube where flexible connections are necessary. The distance from the target to the processing equipment is approximately 10 m. Longer distances of up to 100 m may be used provided the target pressure does not exceed about 0.07 kg cm^{-2} ($\sim$ 1 lb in^{-2}) gauge. To maintain the measuring spiral and flowmeter B at approximately atmospheric pressure, a large pressure drop between the spiral input and the dispensing point should be avoided.

Production Techniques and System Performance

The target is prepared as described in section 6.2.3, particular care being taken to dry thoroughly the activated charcoal as failure to do this could cause water vapour and volatile organic compounds to enter the system during the irradiation. Before bombardment the scavenge pump is started and the system flushed for half an hour with the sweep gas flowing at the working flow rate of 1 ml s^{-1}. After flushing is complete and having checked the target pressure, sweep gas flow rate and yield monitor, the irradiation is started.

A steady state of output activity is reached about 13 min after the start of bombardment at the irradiation and flow rate conditions stated in Table 6.5. To increase the production rate the beam current may be raised to 40 μA, but this should be considered the maximum since the target window and copper retaining foil may not withstand a beam current in excess of this value, especially if the beam is not well spread. The radioactive concentration at the system output may be reduced by either decreasing the beam current or diluting the gas on dispensing. Because of the unpredictable characteristics of activated charcoal it is difficult to give precise information about the stability of the yield at nominally equilibrium conditions. In general, the variations in the production rate tend to be greater than those experienced with the gas and graphite matrix targets.

It will be seen from Table 6.5 that the radiochemical purity at the system output is in excess of 99 per cent $^{13}N_2$. The trace amount of $C^{15}O$ at the target and system output gradually disappears as air is desorbed from the activated charcoal during bombardment. To avoid a premature rise in the $HC^{13}N$ contaminant level the soda lime absorber is regularly changed. Routine tests are made of the chemical and radiochemical composition of the system output gas using decay curve analysis and radio-gas chromatography. Care should be taken that the high proportion of helium in the system output gas does not interfere with physiological investigations.

For systems where the irradiation parameters differ widely from those shown in Table 6.5, care should be taken to investigate the stability of the system output gas composition under all anticipated operating conditions.

6.3.4 $^{13}N_2$ Production System Selection

The choice of $^{13}N_2$ production system is determined principally by the required radioactive concentration and whether the $^{13}N_2$ is needed in solution as well as in the gas phase. Generally speaking, if $^{13}N_2$ solutions and high specific activity gas phase samples are to be prepared it is preferable to use a CO_2 gas target production

system as described in section 6.3.1. Such a system has the advantages of simplicity of target design, no need for a furnace and a very high gas phase $^{13}N_2$ specific activity. These, together with the use of an uncritical beam power density make this the system of choice where possible.

TABLE 6.6

COMPARATIVE PERFORMANCE OF ^{13}NN PRODUCTION SYSTEMS

Production system	*Typical ^{13}NN production sample*				*Remarks*
	Gas phase		*Solution*		
	mCi	ml 760 mm Hg 20°C	mCi	ml	
CO_2 gas target $^{12}C(d,n)^{13}N$	13	0.5	2.0	10	System of choice if possible Simple target design No furnace required Beam power density (beam distribution) not critical for optimum yield
Graphite matrix target $^{12}C(d,n)^{13}N$	43	1.8	2.1	10	System to use for maximum activity gas phase samples Target material needs preparation Copper oxide furnace required High beam power density necessary for optimum yield
Activated charcoal target $^{12}C(d,n)^{13}N$	4.8*	100	NA	NA	System suitable for 'on line' gas phase use only Unsuitable for ^{13}NN solution preparation Target material needs preparation Beam power density not critical for optimum yield

NA: Not applicable.
* Activity at end of 100 s collection period.

If a higher system output yield is required it is necessary to use the graphite matrix target production system described in section 6.3.2. This system is particularly useful when maximum activity gas phase samples are needed. However, the radioactive concentration of $^{13}N_2$ solutions prepared using this production system is similar to that obtained using the CO_2 gas target system. The graphite matrix target production system requires high beam power densities and preparation of the target material, as well as a copper oxide furnace capable of being re-oxidized *in situ*. Thus, this system would

only be used if the demand for gas phase activity were in excess of that obtainable from the CO_2 gas target production system.

If $^{13}N_2$ is required only in the gas phase and 'on line', the production system using the activated charcoal target may be used (section 6.3.3). Although the radioactive concentration is relatively low and some care is necessary in the preparation of the target material and target assembly, it is a useful system where only moderate amounts of activity are required and may be used with a wide range of beam power density. This system is not suitable for the production of $^{13}N_2$ solutions.

The comparative performance of the $^{13}N_2$ production systems is given in Table 6.6.

REFERENCES

1. Brauer, G. (1963). *Handbook of Preparative Inorganic Chemistry*. Vol. 1, 2nd edn, p. 458. New York; Academic Press.
2. Brownell, G. L., Burnham, C. A., Hoop, B. Jr. and Kazemi, H. (1972). 'Positron scintigraphy with short-lived cyclotron produced radiopharmaceuticals and a multicrystal positron camera.' *Proceedings of I.A.E.A. Symposium on Medical Radioisotope Scintigraphy*, Monaco.
3. Buckingham, P. D. and Clark, J. C. (1972). 'Nitrogen-13 solutions for research studies in pulmonary physiology.' *Int. J. Appl. Radiation and Isotopes* **23**, 5–8.
4. Buckingham, P. D. and Forse, G. R. (1963). 'The preparation and processing of radioactive gases for clinical use.' *Int. J. Appl. Radiation and Isotopes* **14**, 439–45.
5. Clark, J. C., Matthews, C. M. E., Silvester, D. J. and Vonberg, D. D. (1967). 'Using cyclotron produced isotopes at Hammersmith Hospital.' *Nucleonics* **25**, 6, 54–62.
6. Cohen, M. B., Spolter, L., MacDonald, N. S. and Cassen, B. (1972). 'Enzymatic synthesis of ^{13}N L-Glutamine.' *J. Nuclear Med.* **13**, 6, 422. (Abstract.)
7. Cohen, M. B., Spolter, L., MacDonald, N. *et al.* (1973). 'Production of ^{13}N labelled amino acids by enzymatic synthesis.' *Proceedings of IAEA/WHO Symposium on New Developments in Radiopharmaceuticals and Labelled Compounds*. Copenhagen. IAEA ST1/PUB/344 Vol I.
8. Dillman, L. T. (1970). 'Radionuclide decay schemes and nuclear parameters for use in radiation-dose estimation, Pt. 2.' *J. Nuclear Med.* (Medical Internal Radiation Dose Committee) **11**, Suppl. 4, pamphlet No. 6.
9. Glass, H. I. and Silvester, D. J. (1970). Review Article: 'Cyclotrons in nuclear medicine.' *Br. J. Radiol.* **43**, 589–601.
10. Greene, R. and Burnham, C. A. (1972). 'Positron camera studies of regional ventilation with ^{13}NN.' *J. Nuclear Med.* **13**, 6, 433. (Abstract.)
11. Greene, R., Hoop, B. and Kazemi, H. (1971). 'Use of ^{13}N in studies of airway closure and regional ventilation.' *J. Nuclear Med.* **12**, 11, 719–23.

[12] Harper, P. V., Lathrop, K. A., Krizek, H., Lembares, N., Stark, V. and Hoffer, P. B. (1972). 'Clinical feasibility of myocardial imaging with $^{13}NH_3$.' *J. Nuclear Med.* **13**, 4, 278.

[13] Harper, P. V., Schwartz, J., Resnekov, L., Hoffer, P., Krizek, H., Stark, V., Lembares, N. and Lathrop, K. (1972). 'Clinical myocardial imaging with ^{13}N ammonia.' *J. Nuclear Med.* **13**, 10, 782. (Abstract.)

[14] Hislop, J. S. and Williams, D. R. (1971). 'A method for the chemical separation of ^{15}O from ^{13}N and ^{11}C in gaseous species produced by inert gas fusion.' *Radiochem. and Radioanalyt. Letters* **7**, 3, 129–38.

[15] Hunter, W. W., Murano, R., Nelp, W. B. and Monahan, W. G. (1973). '$^{13}NH_3$ for tracer studies in molecular medicine: production and fundamental studies.' *Proceedings of IAEA/WHO Symposium on New Developments in Radiopharmaceuticals and Labelled Compounds.* Copenhagen. IAEA ST1/PUB/344 Vol I.

[16] Kaye, G. W. C. and Laby, T. H. (1959). *Tables of Physical and Chemical Constants.* 12th edn, p. 135. London; Longmans Green.

[17] Lembares, N., Dinwoodie, R., Gloria, I., Harper, P. and Lathrop, K. (1972). 'A rapid enzymatic synthesis of 10 min. ^{13}N glutamate and its pancreatic localization.' *J. Nuclear Med.* **13**, 10, 786. (Abstract.)

[18] Matthews, C. M. E. and Dollery, C. T. (1964). 'Interpretation of xenon-133 lung wash-in and wash-out curves using an analogue computer.' *Clin. Sci.* **28**, 573–90.

[19] Monahan, W. G., Tilbury, R. S. and Laughlin, J. S. (1972). 'Uptake of ^{13}N labelled ammonia.' *J. Nuclear Med.* **13**, **4**, 274–7.

[20] Rosenzweig, D. Y., Hughes, J. M. and Jones, T. (1969). 'Uneven ventilation within and between regions of the normal lung measured with nitrogen-13.' *Respiration Physiol.* **8**, 86–97.

[21] Tilbury, R. S., Dahl, J. R., Monahan, W. G. and Laughlin, J. S. (1971). 'The production of ^{13}N labelled ammonia for medical use.' *Radiochem. and Radioanalyt. Letters* **8**, 6, 317–23.

[22] Vonberg, D. D., Baker, L. C., Buckingham, P. D., Clark, J. C., Finding, K., Sharp, J. and Silvester, D. J. (1970). 'Target systems for radioisotope production on the Medical Research Council cyclotron.' In *The Uses of Cyclotrons in Chemistry, Metallurgy and Biology.* (Ed. by C. B. Amphlett.) London; Butterworths.

[23] Welch, M. J., Lifton, J. F. and Carter, C. C. (1971). 'Production of simple ^{13}N labelled compounds and the use of ^{13}N labelled ammonia in studying body ammonia levels.' *J. Nuclear Med.* **12**, 6, 404–5. (Abstract.)

[24] West, J. B. (1964). 'Pulmonary function studies with ^{15}O, ^{11}C and ^{13}N.' *Proceedings of Symposium on Dynamic Clinical Studies with Radioisotopes.* U.S.A.E.C. Report TID 7678, pp. 213–36.

[25] West, J. B. (1967). 'The use of radioactive materials in the study of lung function.' Medical Monograph No. 1, revised edn. Amersham, England; U.K.A.E.A., The Radiochemical Centre.

Carbon-11

7.1 INTRODUCTION

Carbon-11 is a cyclotron produced radionuclide having a half-life of 20.3 min and decaying by the emission of positrons having a maximum energy of 0.98 MeV, to the stable nuclide boron-11 (*Figure 7.1*)[10].

Carbon monoxide and carbon dioxide both labelled with ^{11}C (^{11}CO and $^{11}CO_2$) are produced at several centres of nuclear medicine[2,5,12,19,23,26,28,30,32], the principal uses being serial blood volume estimation[6,15,17], placental localization[18], spleen function studies[16], pulmonary investigations[33,34] and the study of CO_2 pools[7]. Ease of administration and a low radiation dose to the patient make ^{11}C an attractive radionuclide for this work. The 0.511 MeV gamma radiation resulting from positron annihilation permits organ visualization using a gamma camera[18] or scintiscanner[16,25]. A further advantage is that the half-life is long enough to make ^{11}C storage systems a practical proposition[4]. Such systems allow the nuclide to be used away from the site of production and can also result in the more efficient use of cyclotron running time. Storage systems are also of value in studies requiring the consecutive use of two labelled gases (e.g. ^{11}CO and $H_2{}^{15}O$).

A new field of development is the synthesis of ^{11}C labelled organic compounds[3,8,11,14,21,22,24,35,36,37,38]. Using a gamma camera or scintiscanner the *in vivo* distribution and metabolic fate of such compounds may be studied. However, the preparation of ^{11}C labelled organic compounds requires sophisticated target systems and rapid radiochemical processes and much of the current work is directed towards achieving these.

7.2 TARGET SYSTEMS

From Table 2.1 it will be seen that ^{11}C may be produced by a variety of nuclear reactions. Some of these are of limited practical value either because of their high threshold energy, low yield of product nuclei, or possible interference from undesired nuclear reactions. Of the remainder, those that are in common use are the

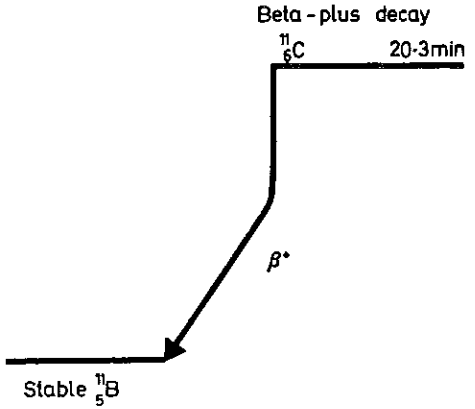

Radiation	Per cent per disintegration	Transition energy (MeV)
Beta plus	99·8	0·980*
Electron capture	0·19	1·1
Reference (10) *Endpoint energy (MeV)		

Figure 7.1 Carbon-11 decay scheme

$^{11}B(p,n)^{11}C$, $^{14}N(p,\alpha)^{11}C$, $^{10}B(d,n)^{11}C$ and $^{11}B(d,2n)^{11}C$ reactions (Table 7.1).

When nitrogen is used as a target material for ^{11}C production, a gas type target box is continuously flushed with a sweep gas containing a high proportion of N_2.

A more common target material is boron which is used in the form of boron trioxide (B_2O_3). This is available as a powder which when heated to approximately 400°C melts and fuses into a glass-like substance. When used as a target material the B_2O_3 is melted

TABLE 7.1

SOME PHYSICAL CHARACTERISTICS AND CLINICAL USES OF ^{11}C

Half-life (min)	*Principal emissions*	*Nuclear reactions for production in typical target systems*	*Practical threshold energy* (MeV)*	*Typical available radioactive concentration and specific activity† 20°C 760 mm Hg*	*Clinical uses and references*
20.3	β^+ 0.98 MeV 0.998 per disintegration resulting in 1.996 0.511 MeV annihilation gamma photons per disintegration	$^{11}B(p,n)^{11}C$	~ 3	0.084 mCi ml^{-1} 2.0 × 10^6 mCi mM^{-1} CO_2	Blood volume estimation (6, 15, 17)
		$^{14}N(p,\alpha)^{11}C$	~ 5	0.20 mCi ml^{-1} 9.5 × 10^5 mCi mM^{-1} CO_2	Placental localization (18)
		$^{10}B(d,n)^{11}C$ $^{11}B(d,2n)^{11}C$	~ 3 ≯ ~ 6	0.15 mCi ml^{-1} 6.8 × 10^5 mCi mM^{-1} CO	Spleen function studies (16) Pulmonary investigations (33, 34) CO_2 pools (7)

* Derived from data in 'The production of the radioisotopes ^{11}C, ^{13}N and ^{15}O using the deuteron beam from a 3 MeV Van de Graaff accelerator.' A. I. M. Ritchie, *Nuclear Instruments and Methods* 64, 181–4 (1968) and experimental data on the yields of ^{11}C etc. N. N. Krasnov *et al.* in *Uses of Cyclotrons in Chemistry, Metallurgy and Biology*, page 341. (Ed. by C. B. Amphlett.) Butterworths, London (1970).

† Based on relevant data contained in this work.

into a block or onto a stepped metal wedge and supported in a target box.

7.2.1 Target for ^{11}C Production Using Nitrogen as a Target Material (Gas Target)

Target Design

Carbon-11 may be continuously produced in a gas target using nitrogen as the target material. The chemical form of the product nuclei is largely dependent upon the sweep/target gas composition and irradiation conditions.

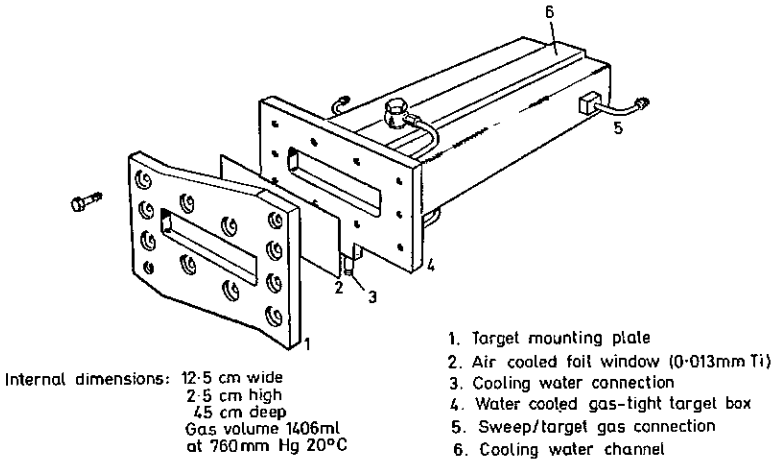

Figure 7.2 Nitrogen gas target for ^{11}C production

A gas target used for the production of $^{11}CO_2$ is shown in *Figure 7.2*. Designed for use with a 7.6 MeV proton beam of up to 40 μA intensity, it produces ^{11}C by the $^{14}N(p,\alpha)^{11}C$ reaction using nitrogen as the combined target and sweep gas. The target box is made entirely of aluminium and has a 0.013 mm titanium foil beam entry window which degrades the beam energy to 7.4 MeV. The depth in the direction of the beam path is 45 cm, ideally sufficiently 'thick' to reduce the proton beam energy to ~ 5 MeV (the practical threshold energy[13] for the $^{14}N(p,\alpha)^{11}C$ reaction) when the sweep gas pressure is 0.53 kg cm^{-2} (7.5 lb in^{-2}) above atmospheric pressure. The total gas volume of the target is ~ 1400 ml at atmospheric pressure and ambient temperature.

Sweep/Target Gases, Yields and Irradiation Conditions

The sweep/target gas used with the ^{11}C gas target may be either nitrogen or nitrogen containing a small percentage of oxygen. In either case the chemical form of the target effluent is almost entirely $^{11}CO_2$. Even if 99.9 per cent purity nitrogen is used there are usually still sufficient oxygen atoms present in the target system both for the primary product ^{11}CO to be formed and for its subsequent radiolytic oxidation to $^{11}CO_2$. If considered necessary, a trace of oxygen may be added to the sweep/target gas; a mixture

TABLE 7.2

PERFORMANCE OF GAS TARGET FOR EXPERIMENTAL ^{11}C PRODUCTION USING NITROGEN AS A SWEEP/TARGET GAS

Particle	Proton
Nuclear reaction	$^{14}N(p,\alpha)^{11}C$
Current	40 μA
Energy	7.6 MeV
Energy incident on target material	7.4 MeV
Window material and thickness	Ti 0.013 mm
Energy loss in window	0.2 MeV
Beam distribution dimensions	Not measured
Target dimensions	12.5 cm wide, 2.5 cm high, 45 cm deep. Gas vol. 1406 ml at 760 mm Hg 20°C
Target pressure	0.53 kg cm^{-2} (7.5 lb in^{-2}) gauge
Sweep/target gas flow rate	1.38 ml s^{-1}
Target output to system output	$\sim$ 10 m

Sweep/target gas	*Per cent of total recovered activity at target output*				^{11}C *Recovery at target output*		
	$^{11}CO_2$	^{11}CO	^{13}NN	^{15}OO	mCi s^{-1}	mCi ml^{-1} 760 mm Hg 20 °C	mCi mM^{-1} CO_2 760 mm Hg 20 °C
Nitrogen	99	< 1	< 0.1	< 0.1	0.27	0.20	9.5×10^5
Tolerances %	> 90 ..... ± 1 < 1 ..... ±50				±10		

of 0.1 per cent O_2 in N_2 is more than adequate. Although the authors have shown that even a saturation level of 4 per cent O_2 in N_2 results in the production of approximately 94 per cent $^{11}CO_2$, this level of oxygen is unnecessary for normal production and may even result in the formation of oxides of nitrogen, the presence of which could be undesirable, especially if the gas were to be used in biological studies which included systems that were easily poisoned by NO_x. The use of excess oxygen in the sweep/target gas has also been shown to increase the $^{13}N_2$ and $^{15}O_2$ contaminant levels; the $^{13}N_2$ is produced by the $^{16}O(p,\alpha)^{13}N$ reaction, the increase of $^{15}O_2$ (formed by the $^{15}N(p,n)^{15}O$ reaction) being due to the higher level

of oxygen carrier gas present in the system (see section 5.3.1, page 132).

Table 7.2 shows some radioactive products which have been detected in ^{11}C experimental irradiations using a 7.6 MeV proton beam to bombard the gas target shown in *Figure 7.2*. The gas flow system which was used is shown in *Figure 7.3*. The analysis of these products was carried out using a radio-gas chromatograph fitted with a katharometer and a scintillation β detector, the column

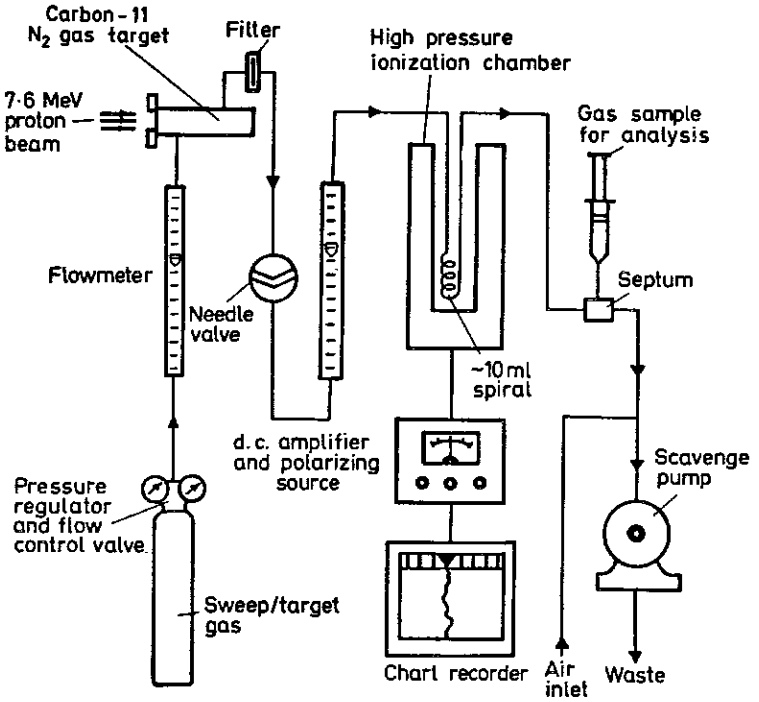

Figure 7.3 Gas flow system for the experimental production of ^{11}C using a nitrogen gas target

materials, temperatures and carrier gas being the same as those given in section 7.2.2. The yield is expressed as the rate of production of activity in mCi s^{-1} continuously monitored by a 10 ml spiral in an ionization chamber approximately 10 m from the target.

7.2.2 Target for ^{11}C Production Using Boron Trioxide as a Target Material (Solid Target)

Target Design

When B_2O_3 is used as a target material for ^{11}C production it is necessary for it to be maintained at its melting point (400°C) during bombardment so that the radioactive products may be released. This is usually done by using the beam power only although when the

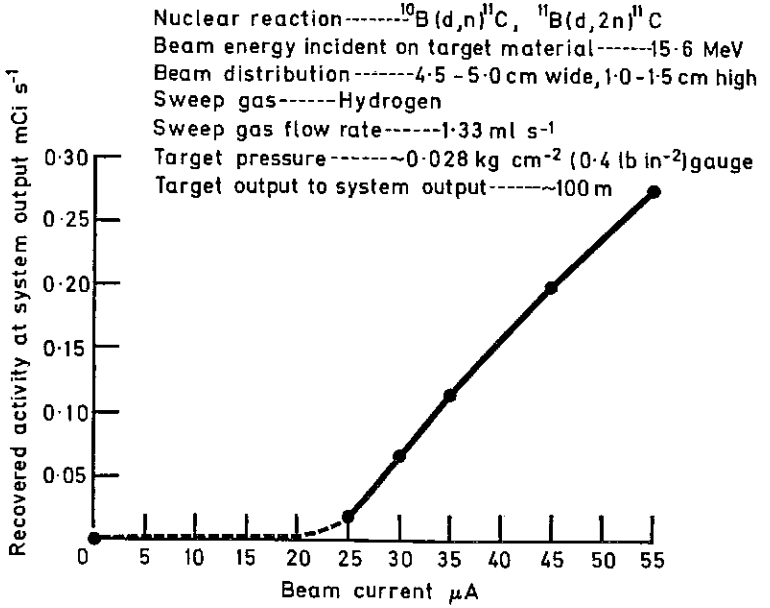

Figure 7.4 Boron trioxide wedge target: recovered activity at ^{11}CO system output *versus* beam current

cyclotron output is limited, supplementary heating of the B_2O_3 could be advantageous since a thermal threshold exists in the yield/beam current relationship (*Figure 7.4*). The B_2O_3 may be supported in the charged particle beam in a variety of ways; typical configurations which have been tried include blocks and wedge shaped inserts[32]. One of the most successful methods is to melt it onto a stepped wedge and allow the beam to strike it at grazing incidence[31].

A target of this type, shown in *Figure 7.5*, is designed for the continuous production of ^{11}CO or $^{11}CO_2$ using a 16 MeV deuteron

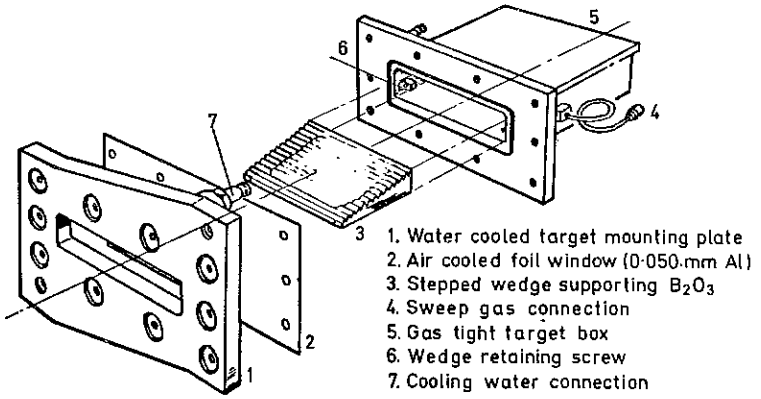

Figure 7.5 Boron trioxide wedge target for ^{11}C production

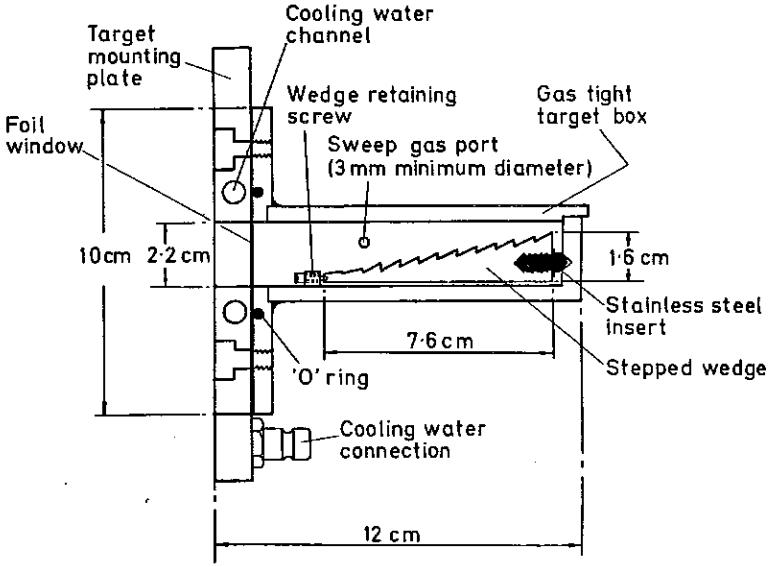

Figure 7.6 Sectional side view of boron trioxide wedge target

beam[1] of 40 μA intensity, the nuclear reactions being $^{10}B(d,n)^{11}C$ and $^{11}B(d,2n)^{11}C$. It may also be used with a 40 μA 7.6 MeV proton beam, the nuclear reaction in this case being $^{11}B(p,n)^{11}C$.

To prepare the target approximately 16 g of B_2O_3 powder is melted onto the stepped wedge in an electric furnace (see section 3.11.4, page 100) to a thickness of 1–2 mm. The deuteron beam, defocussed to cover an area of approximately 4.4 cm^2, passes through the 0.050 mm aluminium foil window and strikes the surface of the B_2O_3 at grazing incidence. With a beam current of 40 μA the total incident power is approximately 620 W on the surface of the wedge which is deliberately in poor thermal contact with the surrounding box (*Figure 7.6*). This power is sufficient to melt the B_2O_3 releasing ^{11}C labelled gases into a stream of sweep gas passed through the box at about 1.3 ml s^{-1}. The molten B_2O_3 is prevented from rapid movement down the wedge by the step shape.

The gas volume of the target box is kept small (about 200 cm^3) to maximize the radioactive concentration of the effluent gas. Its normal working pressure is approximately 0.007 kg cm^{-2} (0.1 lb in^{-2}) above atmospheric pressure. Brass is used for all parts of the target box except the front plate and window which are aluminium and cooled. Aluminium wedges have also been used (see section 3.11.4, page 100). The gas inlet and outlet connections are made using vacuum fittings.

During bombardment the molten B_2O_3 slowly migrates from the area of the beam strike eventually causing a loss of yield. This process takes about 12 hours after which the wedge has to be re-coated. Since B_2O_3 is hygroscopic, wedges are always stored in a desiccator until required for use.

Since the stepped wedge type of target is not thick in the nuclear sense, its yield using a 16 MeV deuteron beam is only about 40 per cent of that obtainable with other target material configurations in which the beam energy is degraded to ~ 3 MeV, the practical threshold energy for the $^{10}B(d,n)^{11}C$ reaction. However, the relatively long life of the wedge type target usually outweighs this disadvantage in practice.

Sweep Gases, Yields and Irradiation Conditions

The parameters affecting the total yield recovered from a B_2O_3 carbon-11 target may be listed as follows:

(*a*) Target material nuclear cross section.
(*b*) Beam current.
(*c*) Beam energy.
(*d*) Target material thickness.
(*e*) Sweep gas flow rate.

TABLE 7.3

PERFORMANCE OF BORON-TRIOXIDE WEDGE TARGET FOR EXPERIMENTAL ^{11}C PRODUCTION USING DIFFERENT SWEEP GASES

Particle	Deuteron
Nuclear reaction	$^{10}B(d,n)^{11}C$ and $^{11}B(d,2n)^{11}C$
Current	40 μA
Energy	16.1 MeV
Energy incident on target material	15.6 MeV
Window material and thickness	Al 0.05 mm
Energy loss in window	0.5 MeV
Beam distribution dimensions (see section 2.4)	3.0–4.0 cm wide, 1.0–1.5 cm high
Target dimensions	12.7 cm wide, 2.2 cm high, 10 cm deep. Gas vol. 200 ml at 760 mm Hg 20°C
Target pressure	~ 0.007 kg cm^{-2} (0.1 lb in^{-2}) gauge
Sweep gas flow rate	1.33 ml s^{-1}
Target output to system output	~ 10 m

Sweep gas	*Per cent of total recovered activity at target output*				*^{11}C Recovery at target output*				*Target ^{11}C combined efficiency per cent*
	^{11}CO	$^{11}CO_2$	$^{11}CH_4$	^{13}NN	mCi s^{-1}	mCi ml^{-1} 760 mm Hg 20°C	mCi mM^{-1}CO 760 mm Hg 20°C	mCi mM^{-1}CO$_2$ 760 mm Hg 20°C	
Helium	1	83	< 0.1	16	0.28	0.21	—	5.0×10^6	52
1% CO_2 in He	< 1	88	< 0.1	11	0.23	0.17	—	4.0×10^2	44
5% CO_2 in He	< 1	83	< 0.1	16	0.27	0.20	—	0.95×10^2	50
1% CO in He	52	36	< 1	11	0.27	0.20	2.8×10^2	—	50
5% CO in He	72	19	< 1	8.2	0.27	0.20	0.75×10^2	—	50
1% H_2 in He	60	21	9.0	10	0.22	0.17	1.8×10^7	8.8×10^5	42
5% H_2 in He	56	15	22	7.0	0.20	0.15	6.3×10^5	4.0×10^5	37
Hydrogen	86	8.7	5.2	< 1	0.23	0.17	7.1×10^5	3.6×10^4	43
Tolerances %	> 60 ..... ± 10 11–60 ..... ± 20 < 11 ..... ± 50				± 10				± 20

(*f*) Sweep gas composition.
(*g*) Beam distribution.
(*h*) Target material water content.
(*i*) Target material temperature.

These parameters may be divided into those affecting the activity produced within the target, and those affecting the recovery of activity from the target. Thus (*a*), (*b*), (*c*) and (*d*) largely determine the activity produced, whilst (*e*), (*f*), (*g*), (*h*) and (*i*) tend to determine the amount of recovered activity and its chemical composition. With the recovery of the activity depending upon so many factors the yield is never constant from day to day or even during a bombardment of say, three hours' duration. However, it is possible to determine the relationship between some of the parameters by running for long periods and taking mean values of beam current, yield and analyses of samples.

Table 7.3 shows some radioactive products which have been detected in ^{11}C experimental bombardments using a 16 MeV deuteron beam to intercept the stepped wedge target shown in *Figures* 7.5 and 7.6. The analysis of these products was carried out using a radio-gas chromatograph fitted with a katharometer and a scintillation β detector (section 3.2.3, page 50). Three 1.5 m × 4.8 mm bore columns were used: molecular sieve (type 5A), silica gel and Poropak Q, all of 80–100 mesh. Fixed column temperatures of 50, 75 or 100°C were used, the chromatograph carrier gas being helium.

The gas flow system, shown schematically in *Figure* 7.7 was of open circuit design. The yield is expressed as the rate of production of activity in mCi s^{-1} continuously monitored by a 200 ml cylinder in an ionization chamber approximately 10 m from the target.

The target efficiency values were obtained by comparing the yield of ^{11}C induced in a similar wedge under conditions where there were no losses of volatile products, decay curve analysis being necessary to extract the ^{11}C component. The activity of the target effluent was measured using a calibrated ionization chamber system shown schematically in *Figure* 7.7. The calibration was performed by taking a 1 ml sample from the input of the monitored 200 ml volume and measuring it with a calibrated gamma spectrometer (see section 3.7.1, page 76).

It will be seen from Table 7.3 that the composition of the target sweep gas has a pronounced effect upon the recovered chemical forms and their specific activities.

The precise nature of the chemical and radiolytic reactions which take place in the target during irradiation is not fully known. However, it is thought that ^{11}CO is the primary product of the reaction

between the ^{11}C atoms and the oxygen atoms in the B_2O_3. In the absence of any oxygen radical scavenger the ^{11}CO is largely radiolysed to $^{11}CO_2$[32]. Thus when helium is used as the sweep gas most of the ^{11}C activity in the target effluent is $^{11}CO_2$, the addition of CO_2 carrier having little effect upon the recovered yield. When stable CO is added to the helium, less $^{11}CO_2$ is made, the CO acting

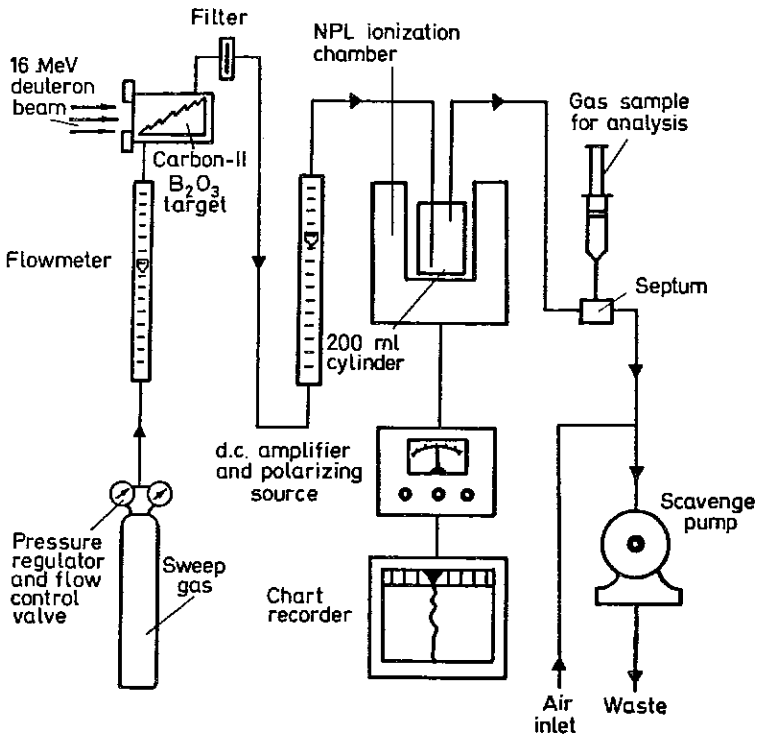

Figure 7.7 Gas flow system for the experimental production of ^{11}C using a boron trioxide wedge target

as a scavenger for oxygen radicals and protecting the ^{11}CO. As more CO is added this protection is seen to increase.

When a sweep gas of helium containing a small amount of hydrogen is used it also acts as a radical scavenger giving some recovery of ^{11}CO without added carrier. If, however, hydrogen is used alone, a much higher recovery of ^{11}CO is achieved, also without added carrier. It should be noted that there is a significant recovery of $^{13}N_2$ with all sweep gases except hydrogen. Presumably the ^{13}N atoms are scavenged by hydrogen to form non-volatile products.

The absence in the target effluent of a possible volatile product $^{13}NH_3$, has been demonstrated both chemically and gas chromatographically, although its possible presence in the target vessel cannot be excluded as $^{13}NH_3$ in trace amounts is known to be rapidly lost to brass and copper surfaces[29]. In systems where ^{13}N is troublesome and cannot be removed chemically, some advantage may be gained by using a proton beam, the energy of which is sufficiently low to prevent the production of this nuclide (see Table 2.1).

7.3 ^{11}CO PRODUCTION SYSTEMS

7.3.1 ^{11}CO System Using a Gas Target

General Principle

This system is designed for the continuous production of ^{11}CO. The flow diagram which is of open circuit design is shown in *Figure 7.8*. Nitrogen is used as the combined target and sweep gas, the target pressure being maintained at about 0.53 kg cm^{-2} (7.5 lb in^{-2}) above atmospheric pressure. Bombardment is by a 40 μA 7.6 MeV proton beam resulting in the $^{14}N(p,\alpha)^{11}C$ reaction. The product at the target output is $^{11}CO_2$ which is reduced to ^{11}CO using zinc at 390°C; a soda lime absorber removes any traces of unconverted $^{11}CO_2$. The performance of the system is given in Table 7.4.

Flow Diagram Description

The gas passes through the system as shown in *Figure 7.8*. The target pressure and flow rate are determined by the settings of the pressure regulator and flow control valve, and the needle valve. The $^{11}CO_2$ target output gas is reduced in the zinc powder furnace to ^{11}CO, the following reaction taking place:

$$Zn + {}^{11}CO_2 \xrightarrow{390°C} ZnO + {}^{11}CO$$

To eliminate any traces of unconverted $^{11}CO_2$ the furnace output gas is passed through a small soda lime absorber.

A continuous indication of radioactive concentration is obtained by passing the gas through a copper measuring spiral having a volume of approximately 10 ml, in a high pressure ionization chamber. The gas may be dispensed either continuously or batch-wise from tap A. If continuous dispensing is required (as in some red cell labelling techniques) the waste dispensed gas may be returned to the system using tap B. At this point an air inlet is introduced in

order that the waste gas scavenge pump will not affect the sweep gas flow rate in the rest of the system.

Target, Sweep/Target Gas and Irradiation Conditions

The target is of the type shown in *Figure 7.2* and described in section 7.2.1. A 0.013 mm titanium foil beam entry window is used. The working pressure is 0.53 kg cm^{-2} (7.5 lb in^{-2}).

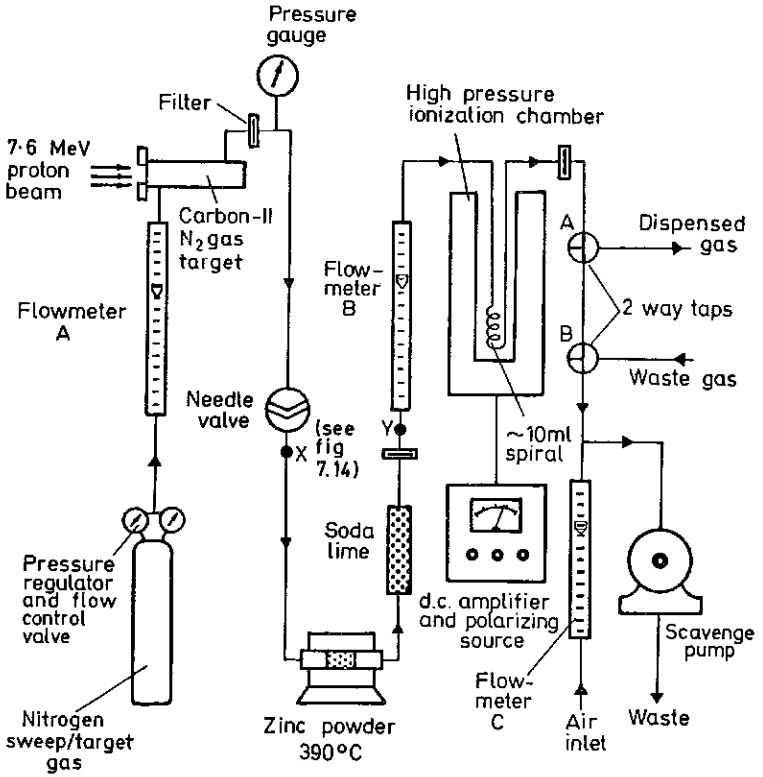

Figure 7.8 ^{11}CO production system using a nitrogen gas target

The combined sweep and target gas is nitrogen (purity 99.9 per cent) and preferably contains not more than 0.05 per cent oxygen. A high level of oxygen may result in the production of oxides of nitrogen and can cause unnecessarily rapid oxidation of the zinc powder, resulting in the possibility of $^{11}CO_2$ 'breakthrough'. A normal sweep/target gas flow rate is ~ 1.4 ml s^{-1}. Particular care should be taken to ensure that the sweep/target gas is not contamin-

ated with CO_2 since if this were the case, dangerous amounts of CO could be produced at the system output (see section 9.3.2, page 317).

The irradiation conditions are given in Table 7.4.

Zinc Powder Furnace and Soda Lime Absorber

The zinc powder is retained by a glass sinter (porosity 1) in a

TABLE 7.4

PERFORMANCE OF A ^{11}CO PRODUCTION SYSTEM USING A NITROGEN GAS TARGET

Particle	Proton
Nuclear reaction	$^{14}N(p,\alpha)^{11}C$
Current	40 μA
Energy	7.6 MeV
Energy incident on target material	7.4 MeV
Window material and thickness	Ti 0.013 mm
Energy loss in window	0.2 MeV
Beam distribution dimensions	Not measured
Target dimensions	12.5 cm wide, 2.5 cm high, 45 cm deep. Gas vol. 1406 ml at 760 mm Hg 20°C
Target pressure	0.53 kg cm^{-2} (7.5 lb in^{-2}) gauge
Sweep/target gas flow rate	1.38 ml s^{-1}
Target output to system output	~ 10 m

Nitrogen sweep gas	*Per cent of total recovered activity*				*^{11}C Recovery*		
	^{11}CO	$^{11}CO_2$	^{13}NN	^{15}OO	mCi s^{-1}	mCi ml^{-1} 760 mm Hg 20°C	mCi mM^{-1} CO 760 mm Hg 20°C
Target output	< 1	99	< 0.1	< 0.1	0.27	0.20	N.A.†
System output*	> 99	0	< 0.1	< 0.1	0.14	0.10	4×10^5
Tolerances %	> 60..... ± 1 < 10..... ± 15				± 10		

* Target output gas passed through a column of zinc powder 5 cm long and 2.5 cm diameter at 390°C, followed by a column of soda lime 16 cm long and 2.5 cm diameter.
† Not applicable.

Pyrex glass tube 2.5 cm internal diamter (see section 3.5.1, page 68). A column 5 cm long is sufficient to effect complete reduction of the $^{11}CO_2$ at a flow rate of 1.38 ml s^{-1}. Care should be taken to maintain the temperature at 390°C ± 10°C(20). If the temperature is too low the reduction may not be complete; if too high there is the danger of the zinc powder fusing into a solid mass or even softening of the glass tube. Since the amount of $^{11}CO_2$ to be removed is very

small, a soda lime absorber 16 cm long and 2.5 cm diameter is sufficient (*Figure 3.6*).

Prolonged use of the zinc furnace will result in the complete oxidation of the zinc resulting in $^{11}CO_2$ breakthrough. Premature exhaustion of the zinc will occur if purged air is allowed to pass through the furnace at its operating temperature.

Flowmeters and Filters

The flowmeters used in the system are of the variable area type. Since this type of flowmeter is pressure dependent, the system flow rate is always determined from flowmeter B since this is virtually at atmospheric pressure. Flowmeter A reads low due to the elevated pressure at this point in the system. Flowmeters A and B have a range of 5–150 ml min^{-1} (0.083–2.5 ml s^{-1}) (N_2) at 760 mm Hg and 18 °C.

The flow rate at the air inlet should not be less than about 100 times that in the rest of the system. Thus the range of flowmeter C should be chosen accordingly. Since the target flow rate is 1.38 ml s^{-1} (83 ml min^{-1}) a useful range for flowmeter C is 2–20 l min^{-1} (air) at 760 mm Hg and 18 °C.

The filters used are of the type described in section 3.3 (page 61). If the gas is required for sterile use it may be dispensed through a Millipore filter as described in section 4.1.3 (page 106).

Gas Transmission Tubes

The system is connected using 2.2 mm diameter, 1.5 mm bore stainless steel tube. Where flexible connections are required, 3.2 mm diameter, 2.0 mm bore nylon tube is used. The distance from the target to the processing equipment is approximately 10 m. Longer distances of up to 100 m may be used provided the target pressure is maintained at 0.53 kg cm^{-2}. In order to maintain flowmeter B and the spiral at approximately atmospheric pressure a large pressure drop between the furnace output and dispensing point should be avoided.

Production Techniques and System Performance

Before bombardment the scavenge pump is started and the system flushed for at least one hour with the sweep gas at the normal working flow rate of 1.38 ml s^{-1} to exclude oxygen, the zinc powder furnace being at ambient temperature. A higher flow rate and shorter time may be possible but the impedance of the zinc powder furnace may set an upper limit to the maximum practicable flow rate. (Alternatively the furnace may be by-passed

for this procedure.) After flushing is complete, the zinc is brought up to its working temperature of 390 °C, and after checking the target pressure and flow rate, and also the yield monitor, the irradiation is started. As the temperature of the gas in the target increases during bombardment the target pressure increases and may need re-adjusting. A steady state of system output activity is reached about 20 min after the start of bombardment at the stated irradiation and flow rate conditions.

It may be necessary to reduce the radioactive concentration at the system output during bombardment. The radioactive concentration of the gas at the dispensing point is a nominal value for given beam current, target pressure and flow rate conditions. It is inadvisable to vary the beam current, target gas pressure or flow rate without radio-gas chromatographic analyses, since the radiation dose per molecule will change with the result that the proportion of each labelled chemical form may change. Thus a practicable way to reduce the radioactive concentration during bombardment is to dilute the gas on dispensing.

To prevent $^{11}CO_2$ appearing at the system output the zinc powder and soda lime are regularly changed. It will be seen from Table 7.4 that the radiochemical purity at the system output is the order of 99 per cent ^{11}CO. The ^{11}C recovery at the system output is lower than that at the target output since about half of the ^{11}C activity remains in the zinc powder furnace. For a higher ^{11}CO production rate and radioactive concentration at the system output, a system using a solid target may be necessary, as described in the next section. For systems where the irradiation parameters differ widely from those shown in Table 7.4, care should be taken to investigate the stability of output composition under all anticipated operating conditions.

7.3.2 ^{11}CO System Using a Solid Target

General Principle

This system is designed for the continuous production of ^{11}CO using B_2O_3 as the target material. The flow diagram which is of open circuit design is shown in *Figure 7.9*. Hydrogen sweep gas is used, the target pressure being only slightly above atmospheric pressure. Bombardment is by a 40 μA 16 MeV deuteron beam resulting in the $^{10}B(d,n)^{11}C$ and $^{11}B(d,2n)^{11}C$ reactions. The product at the target output is largely ^{11}CO with $^{11}CO_2$, $^{11}CH_4$ and a trace of $^{13}N_2(^{13}NN)$ as contaminants. Soda lime is used to absorb the $^{11}CO_2$. The performance of the system is given in Table 7.5.

Flow Diagram Description

The gas passes through the system as shown in *Figure 7.9*. The target pressure and sweep gas flow rate are determined by the settings of the pressure regulator and flow control valve*, a soda lime absorber being used to remove the $^{11}CO_2$ contaminant in the target

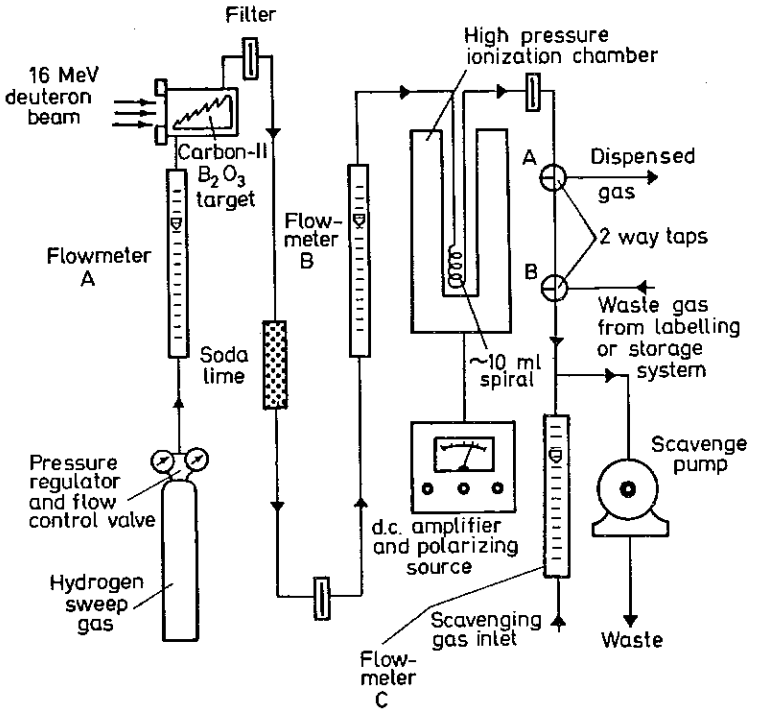

Figure 7.9 ^{11}CO production system using a boron trioxide wedge target

output gas. A continuous indication of radioactive concentration is obtained by passing the gas through a copper measuring spiral having a volume of about 10 ml, in a high pressure ionization

* Under certain adverse conditions (for example, sudden large changes in beam current) it is possible that air could momentarily be sucked back from the system output and thus form a potentially explosive gas mixture. In order to prevent this, it is desirable that the impedance between the hydrogen cylinder and the target input should be as low as possible. Thus it could be advantageous to use a pressure regulator of the low pressure type in conjunction with a low impedance flow control valve (see sections 3.4.2, page 62, and 3.4.4, page 64). The gas transmission tube between the hydrogen cylinder and the target input should also be of a lower impedance than that used in the rest of the system.

chamber. The gas may be dispensed either continuously or batch-wise from tap A. If continuous dispensing is required (as when using a storage system or in some red cell labelling techniques) the waste dispensed gas may be returned to the system using tap B. At this point a scavenging gas inlet is introduced so that the scavenge pump will not affect the sweep gas flow rate.

TABLE 7.5

PERFORMANCE OF A ^{11}CO PRODUCTION SYSTEM USING A BORON TRIOXIDE WEDGE TARGET

Particle	Deuteron
Nuclear reaction	$^{10}B(d,n)^{11}C$ and $^{11}B(d,2n)^{11}C$
Current	40 μA
Energy	16.1 MeV
Energy incident on target material	15.6 MeV
Window material and thickness	Al 0.05 mm
Energy loss in window	0.5 MeV
Beam distribution dimensions (see section 2.4)	3.0–4.0 cm wide, 1.0–1.5 cm high
Target dimensions	12.7 cm wide, 2.2 cm high, 10 cm deep. Gas vol. 200 ml at 760 mm Hg 20°C.
Target pressure	~ 0.007 kg cm^{-2} (0.1 lb in^{-2}) gauge
Sweep gas flow rate	1.33 ml s^{-1}
Target output to system output	~ 10 m

Hydrogen sweep gas	*Per cent of total recovered activity*				*^{11}C Recovery*		
	^{11}CO	$^{11}CO_2$	$^{11}CH_4$	^{13}NN	mCi s^{-1}	mCi ml^{-1} 760 mm Hg 20°C	mCi mM^{-1} CO 760 mm Hg 20°C
Target output	86	8.7	5.2	< 1	0.23	0.17	7.1×10^5
System output*	94	0	5.7	< 1	0.21	0.15	6.8×10^5
Tolerances %	> 60. . . . . ±1 < 10. . . . . ±10				±10		

* Target output gas passed through soda lime column 16 cm long and 2.5 cm diameter.

Scavenging Gas

Since hydrogen is used as a sweep gas, the choice of scavenging gas is important. Air may be used provided the waste gas mixture is well below the explosive limit for an air–hydrogen mixture[9]. This necessitates a scavenging gas flow rate of not less than 16 l min^{-1} when the hydrogen flow rate is 1.3 ml s^{-1} (80 ml min^{-1}). Large volumes other than the shielded scavenging gas tank (see *Figure 3.16*)

should be avoided in the system between the scavenging gas inlet and the point of release into the atmosphere.

A good alternative scavenging gas is nitrogen which may be supplied from a cylinder as shown in *Figure 7.10*.

Target, Sweep Gas and Irradiation Conditions

The target is the B_2O_3 stepped wedge type shown in *Figure 7.5* and described in section 7.2.2. A 0.050 mm aluminium foil beam entry

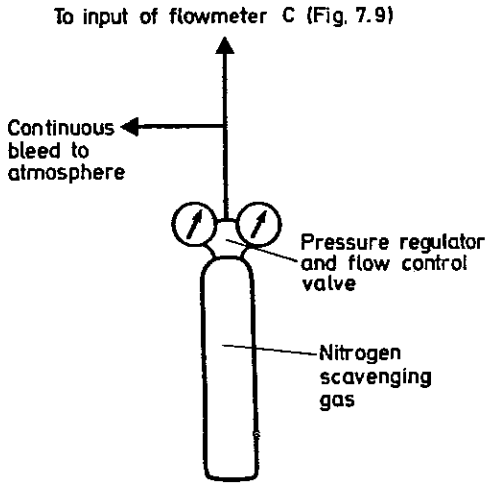

Figure 7.10 Nitrogen scavenging gas supply for ^{11}CO systems using hydrogen as a sweep gas

window is used. The target working pressure may be any value between 0.007 kg cm^{-2} (0.1 lb in^{-2}) and 0.05 kg cm^{-2} (0.7 lb in^{-2}) above atmospheric pressure. During bombardment the outside surface of the target reaches a temperature of about 200 °C. The sweep gas is 99.9 per cent purity hydrogen, a normal range of flow rate being 0.73–1.73 ml s^{-1}. The irradiation conditions are given in Table 7.5.

Soda Lime Absorber

A column of soda lime 16 cm long, 2.5 cm diameter (*Figure 3.6*) is sufficient for removal of the $^{11}CO_2$.

Flowmeters and Filters

The flowmeters used in the system are of the variable area type. Since this type of flowmeter is pressure dependent the system flow

rate is always determined from flowmeter B since this is virtually at atmospheric pressure. Flowmeter A reads slightly low due to the elevated pressure at this point in the system. Flowmeters A and B have a range of 5–150 ml min^{-1} (0.083–2.5 ml s^{-1}) (H_2) at 760 mm Hg and 18 °C. The flow rate at the scavenging gas inlet should not be less than about 100 times that in the rest of the system. Thus a useful range for the scavenging gas flowmeter C is 2–20 l min^{-1} (N_2) at 760 mm Hg and 18 °C.

The filters used are of the type described in section 3.3 (page 61), and are fitted close to the target and soda lime absorber outputs in order to prevent particulate matter escaping into the system. If the gas is required for sterile use it may be dispensed through a Millipore filter as described in section 4.1.3 (page 106).

Gas Transmission Tubes

The system is connected using 2.2 mm diameter, 1.5 mm bore stainless steel tube. Where flexible connections are required 3.2 mm diameter, 2.0 mm bore nylon tube is used. The distance from the target to the processing equipment is approximately 10 m. Longer distances of up to 100 m may be used provided the target pressure is maintained at a value between 0.007 and 0.05 kg cm^{-2}.* In order to maintain flowmeter B and the spiral at approximately atmospheric pressure a large pressure drop between the soda lime absorber output and the dispensing point should be avoided.

Production Techniques and System Performance

Before bombardment, the scavenge pump is started (the nitrogen scavenging gas being turned on if this is used) and the system flushed with hydrogen for half an hour at the working flow rate of 1.3 ml s^{-1} to remove air. After flushing, the sweep gas flow rate and yield monitor are checked and the irradiation is started. Steady state conditions are reached about 15 min after the start of bombardment at the irradiation and flow rate conditions given in Table 7.5.

The radioactive concentration of the gas at the dispensing point is a nominal value for given beam current and sweep gas flow rate conditions. Within certain limits, however, it is possible to change the radioactive concentration at the system output during bombardment. This is done by varying the sweep gas flow rate using the flow control valve. The authors have shown that the ratio of radioactive products at the system output is unchanged for sweep gas flow rate variations between 0.73 and 1.73 ml s^{-1} (44 and 80 ml min^{-1}). Over this range of sweep gas flow rate the radioactive

* See footnote page 232.

concentration at the system output increases as the flow rate is reduced.

Alternatively the gas may be diluted with air immediately after dispensing. When hydrogen containing ^{11}CO is administered by re-breathing[18] a maximum volume of 7 ml is diluted with between

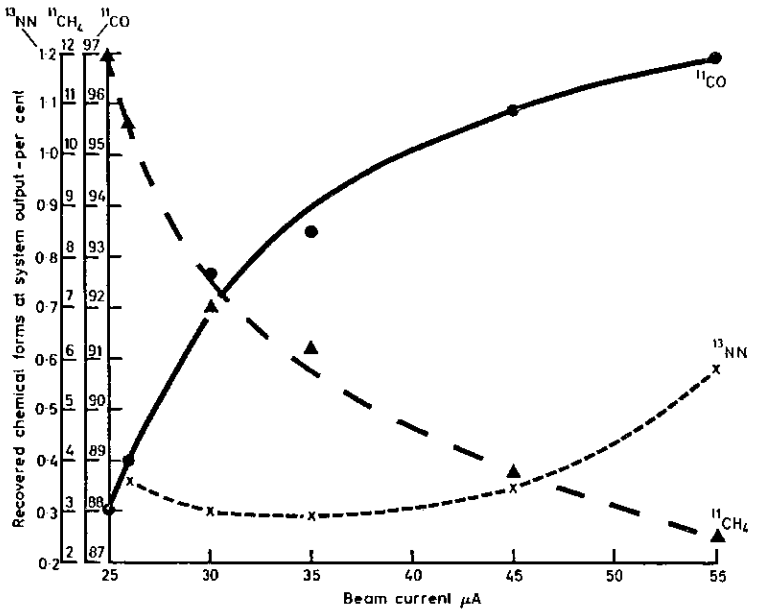

Nuclear reaction	$^{10}B(d,n)^{11}C$, $^{11}B(d,2n)^{11}C$
Beam energy incident on target material	15·6 MeV
Beam distribution	4·5–5·0 cm wide, 1·0–1·5 cm high
Sweep gas	Hydrogen
Sweep gas flow rate	1·33 ml s^{-1}
Target pressure	~0·028 kg cm^{-2} (0·4 lb in^{-2}) gauge
Target output to system output	~100 m

Figure 7.11 ^{11}CO production system using a boron trioxide wedge target: system output radioactive gas composition *versus* beam current

1000 ml and 3000 ml of air or oxygen, thus giving a 0.7 per cent maximum H_2 mixture which is 5.7 times lower than the explosive limit (4 per cent H_2) for air/O_2 mixtures[9].

It is inadvisable to change the beam current to vary the output activity since this will have the effect of varying the proportion of labelled products as shown in *Figure 7.11*. It is also inadvisable to

use any form of continuous dilution technique with hydrogen being used as a sweep gas.

To prevent $^{11}CO_2$ appearing at the system output the soda lime absorber is regularly changed.

It will be seen from Table 7.5 that the radiochemical purity at the system output is the order of 94 per cent ^{11}CO, this being at the stated beam distribution. It has been shown that if the beam width is increased to approximately 12 cm there is a fourfold rise in the proportion of $^{11}CH_4$ at the target output.

The ^{11}C recovery at the system output is slightly lower than that at the target output due to the absorption of the $^{11}CO_2$ by the soda lime. Even so, the ^{11}CO production rate and radioactive concentration at the system output can be significantly higher than the values obtained when using a gas target. The $^{11}CH_4$ contaminant does not interfere with red cell labelling and one has the advantage of a low $^{13}N_2$ contaminant level, not attained when other sweep gases are used with a B_2O_3 target (Table 7.3). When using long gas transmission tubes the level of $^{13}N_2$ at the system output is reduced still further due to the relative decay constants of the ^{13}N and ^{11}C nuclides. For systems where the irradiation parameters differ widely from those shown in Table 7.5, care should be taken to investigate the stability of output composition under all anticipated operating conditions.

7.4 $^{11}CO_2$ PRODUCTION SYSTEMS

7.4.1 $^{11}CO_2$ System Using a Gas Target

General Principle

This system is designed for the continuous production of $^{11}CO_2$. The flow diagram which is of open circuit design is shown in *Figure 7.12*. Nitrogen or 0.1 per cent O_2 in N_2 is used as the combined target and sweep gas, the target pressure being maintained at about 0.53 kg cm^{-2} (7.5 lb in^{-2}) above atmospheric pressure. Bombardment is by a 40 μA 7.6 MeV proton beam resulting in the $^{14}N(p,\alpha)^{11}C$ reaction. The product at the target output is $^{11}CO_2$. The performance of the system is given in Table 7.6.

Flow Diagram Description

The gas passes through the system as shown in *Figure 7.12*. The target pressure and sweep gas flow rate are determined by the settings of the pressure regulator and flow control valve, and the

needle valve. Since the product at the target output is almost entirely $^{11}CO_2$ no absorbers or reagents are required in the system.*

A continuous indication of radioactive concentration is obtained by passing the gas through a copper measuring spiral having a volume of approximately 10 ml, in a high pressure ionization chamber. The gas may be dispensed either continuously or batchwise from Tap A. If continuous dispensing is required the waste

TABLE 7.6

PERFORMANCE OF A $^{11}CO_2$ PRODUCTION SYSTEM USING A NITROGEN GAS TARGET

Particle	Proton
Nuclear reaction	$^{14}N(p,\alpha)^{11}C$
Current	40 μA
Energy	7.6 MeV
Energy incident on target material	7.4 MeV
Window material and thickness	Ti 0.013 mm
Energy loss in window	0.2 MeV
Beam distribution dimensions	Not measured
Target dimensions	12.5 cm wide, 2.5 cm high, 45 cm deep. Gas vol. 1406 ml at 760 mm Hg 20°C
Target pressure	0.53 kg cm^{-2} (7.5 lb in^{-2}) gauge
Sweep gas flow rate	1.38 ml s^{-1}
Target output to system output	~ 10 m

Nitrogen sweep gas	*Per cent of total recovered activity*				^{11}C *Recovery*		
	$^{11}CO_2$	^{11}CO	^{13}NN	^{15}OO	mCi s^{-1}	mCi ml^{-1} 760 mm Hg 20°C	mCi mM^{-1} CO_2 760 mm Hg 20°C
Target output	99	< 1	< 0.1	< 0.1	0.27	0.20	9.5×10^5
System output	99	< 1	< 0.1	< 0.1	0.27	0.20	9.5×10^5
Tolerances %	> 60 ..... ± 1 < 10 ..... ± 15				± 10		

dispensed gas may be returned to the system using tap B. At this point an air inlet is introduced in order that the waste gas scavenge pump will not affect the sweep gas flow rate in the rest of the system.

Target, Sweep/Target Gas and Irradiation Conditions

The target is of the type shown in *Figure 7.2* and described in section 7.2.1. A 0.013 mm titanium foil beam entry window is used.

* Under certain irradiation conditions the ^{11}CO content of the target output gas may exceed one per cent necessitating the use of a small copper oxide furnace between the needle valve and flowmeter B (*Figure 7.12*).

The working pressure is 0.53 kg cm^{-2} (7.5 lb in^{-2}) above atmospheric pressure. The combined sweep and target gas is nitrogen (purity 99.9 per cent) or a mixture of 0.1 per cent O_2 in N_2, a normal flow rate being ~ 1.4 ml s^{-1}. The irradiation conditions are given in Table 7.6.

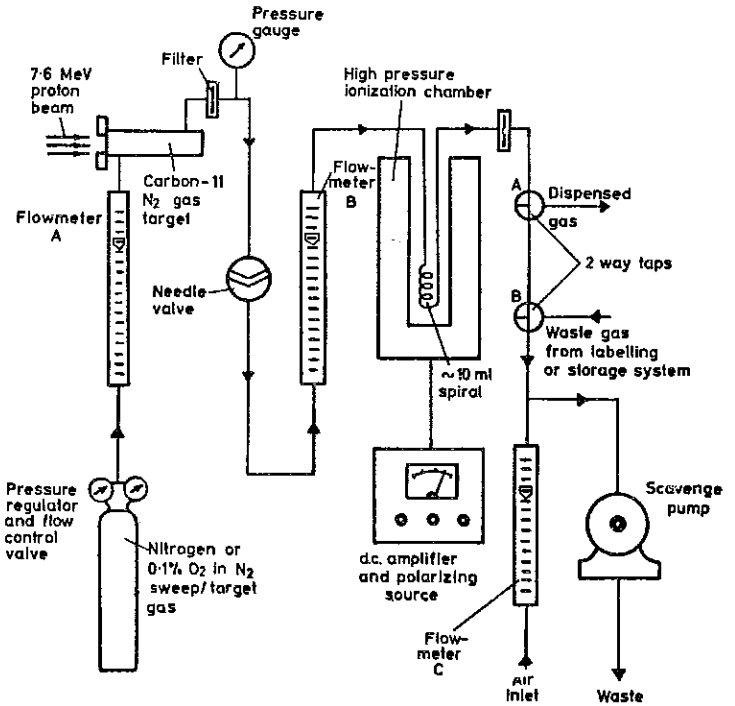

Figure 7.12 $^{11}CO_2$ production system using a nitrogen gas target

Flowmeters and Filters

The flowmeters used in the system are of the variable area type. Since this type of flowmeter is pressure dependent, the system flow rate is always determined from flowmeter B since this is virtually at atmospheric pressure. Flowmeter A reads low due to the elevated pressure at this point in the system.

Flowmeters A and B have a range of 5–150 ml min^{-1} (0.083–2.5 ml s^{-1}) (N_2) at 760 mm Hg and 18°C. The flow rate at the air inlet should not be less than about 100 times that in the rest of the system. Thus the range of flowmeter C should be chosen accordingly.

Since the target flow rate is 1.38 ml s^{-1} (83 ml min^{-1}) a useful range for flowmeter C is 2–20 l min^{-1} (air) at 760 mm Hg and 18 °C.

The filters used are of the type described in section 3.3 (page 61). If the gas is required for sterile use it may be dispensed through a Millipore filter as described in section 4.1.3 (page 106).

Gas Transmission Tubes

The system is connected using 2.2 mm diameter, 1.5 mm bore stainless steel tube. Where flexible connections are required 3.2 mm diameter, 2.0 mm bore nylon tube is used. The distance from the target to the system output is approximately 10 m. Longer distances of up to 100 m may be used provided the target pressure is maintained at 0.53 kg cm^{-2}. In order to maintain flowmeter B and the spiral at approximately atmospheric pressure a large pressure drop between the needle valve output and the dispensing point should be avoided.

Production Techniques and System Performance

Before bombardment the scavenge pump is started and the system flushed for at least one hour with the sweep gas flowing at ~2.5 ml s^{-1} to remove oxygen. After flushing is complete, and after checking the target pressure and flow rate, and also the yield monitor, the irradiation is started. As the temperature of the gas in the target increases during bombardment, the target pressure increases and may need re-adjusting. A steady state of system output activity is reached about 20 min after the start of bombardment at the stated irradiation and flow rate conditions.

It may be necessary to reduce the radioactive concentration at the system output during bombardment. The radioactive concentration of the gas at the dispensing point is a nominal value for given beam current, target pressure and flow rate conditions. It is inadvisable to vary the beam current, target gas pressure or flow rate without radio-gas chromatographic analyses, since the radiation dose per molecule will change with the result that the proportion of each labelled chemical form may change. Thus a practicable way to reduce the radioactive concentration during bombardment is to dilute the gas on dispensing.

It will be seen from Table 7.6 that the radiochemical purity at the system output is the order of 99 per cent $^{11}CO_2$. The ^{11}C recovery at the system output is virtually the same as that at the target output unless long gas transmission tubes are being used, in which case the target output gas will decay significantly during transit.

For systems where the irradiation parameters differ widely from those shown in Table 7.6 care should be taken to investigate the

stability of output composition under all anticipated operating conditions.*

7.4.2 $^{11}CO_2$ System Using a Solid Target

General Principle

This system is designed for the continuous production of $^{11}CO_2$

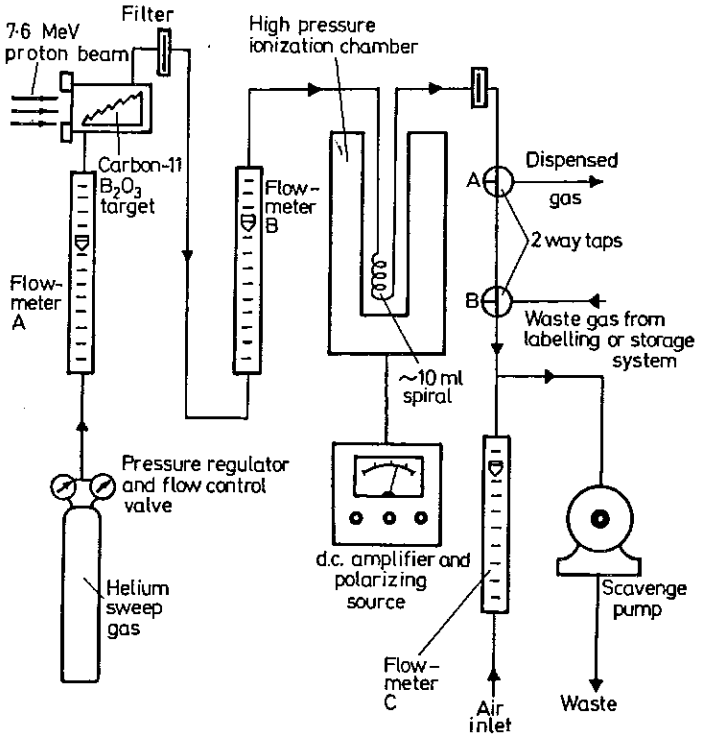

Figure 7.13 $^{11}CO_2$ production system using a boron trioxide wedge target

using B_2O_3 as the target material. The flow diagram which is of open circuit design is shown in *Figure 7.13*. Helium sweep gas is used, the target pressure being only slightly above atmospheric pressure. Bombardment is by a 40 μA 7.6 MeV proton beam resulting in the $^{11}B(p,n)^{11}C$ reaction. The product at the target output is largely $^{11}CO_2$ with ^{11}CO and $^{13}N_2$ as contaminants. The performance of the system is given in Table 7.7.

* See footnote page 238.

Flow Diagram Description

The gas passes through the system as shown in *Figure 7.13*. The target pressure and sweep gas flow rate are determined by the settings of the pressure regulator and flow control valve. Since the product at the target output is almost entirely $^{11}CO_2$ no absorbers or reagents are required in the system. A continuous indication of radioactive concentration is obtained by passing the gas through a copper measuring spiral having a volume of about 10 ml, in a high pressure ionization chamber. The gas may be dispensed either continuously or batch-wise from Tap A. If continuous dispensing is required the waste dispensed gas may be returned to the system using tap B. At this point an air inlet is introduced so that the scavenge pump will not affect the sweep gas flow rate.

TABLE 7.7

PERFORMANCE OF A $^{11}CO_2$ PRODUCTION SYSTEM USING A BORON TRIOXIDE WEDGE TARGET

Particle	Proton
Nuclear reaction	$^{11}B(p,n)^{11}C$
Current	40 μA
Energy	7.6 MeV
Energy incident on target material	7.4 MeV
Window material and thickness	Ti 0.013 mm
Energy loss in window	0.2 MeV
Beam distribution dimensions	Not measured
Target dimensions	12.7 cm wide, 2.2 cm high, 10 cm deep. Gas vol. 200 ml at 760 mm Hg 20°C
Target pressure	~ 0.007 kg cm^{-2} (0.1 lb in^{-2}) gauge
Sweep gas flow rate	1.35 ml s^{-1}
Target output to system output	~ 10 m

Helium sweep gas	*Per cent of total recovered activity*			*^{11}C Recovery*		
	$^{11}CO_2$	^{11}CO	^{13}NN	mCi s^{-1}	mCi ml^{-1} 760 mm Hg 20°C	mCi mM^{-1} CO_2 760 mm Hg 20°C
Target output	98	1.1	0.90	0.11	0.084	2.0×10^6
System output	98	1.1	0.90	0.11	0.084	2.0×10^6
Tolerances %	> 60..... ± 1 < 10..... ± 15			± 10		

Target, Sweep Gas and Irradiation Conditions

The target is the B_2O_3 stepped wedge type shown in *Figure 7.5*, and described in section 7.2.2. A 0.013 mm titanium foil beam entry window is used, the working pressure being approximately 0.007 kg cm^{-2} (0.1 lb in^{-2}) above atmospheric pressure. The sweep gas is helium of 99.995 per cent purity, a normal flow rate being ~ 1.4 ml s^{-1}. The irradiation conditions are given in Table 7.7.

Flowmeters and Filters

The flowmeters used in the system are of the variable area type. Since this type of flowmeter is pressure dependent, the system flow rate is always determined from flowmeter B since this is virtually at atmospheric pressure. Flowmeter A reads low due to the elevated pressure at this point in the system. Flowmeters A and B have a range of 5–150 ml min^{-1} (0.083–2.5 ml s^{-1}) (He) at 760 mm Hg and 18 °C.

The flow rate at the air inlet should not be less than about 100 times that in the rest of the system. Thus the range of flowmeter C should be chosen accordingly. Since the target flow rate is 1.35 ml s^{-1} (81 ml min^{-1}) a useful range for flowmeter C is 2–20 l min^{-1} (air) at 760 mm Hg and 18 °C.

The filters used are of the type described in section 3.3 (page 61). If the gas is required for sterile use it may be dispensed through a Millipore filter as described in section 4.1.3 (page 106).

Gas Transmission Tubes

The system is connected using 2.2 mm diameter, 1.5 mm bore stainless steel tube. Where flexible connections are required 3.2 mm diameter, 2.0 mm bore nylon tube is used. The distance from the target to the system output is approximately 10 m. Longer distances of up to 100 m may be used provided the target pressure is maintained at approximately 0.007 kg cm^{-2}. In order to maintain flowmeter B and the spiral at approximately atmospheric pressure, a large pressure drop between flowmeter B and the dispensing point should be avoided.

Production Techniques and System Performance

Before bombardment the scavenge pump is started and the system flushed with the sweep gas for half an hour at the working flow rate of 1.35 ml s^{-1} to remove air. After flushing, the sweep gas flow rate and yield monitor are checked and the irradiation is started. A steady state of system output activity is reached about 15 min after the start of bombardment at the stated irradiation and flow rate conditions.

It may be necessary to reduce the radioactive concentration at the system output during bombardment. The radioactive concentration of the gas at the dispensing point is a nominal value for given beam

current, target pressure and flow rate conditions. It is inadvisable to vary these parameters without radio-gas chromatographic analyses, since the radiation dose per molecule will change with the result that the proportion of each labelled chemical form may change. Thus, a reduction of radioactive concentration during bombardment is obtained by diluting the gas on dispensing.

It will be seen from Table 7.7 that the radiochemical purity at the system output is the order of 98 per cent $^{11}CO_2$. The ^{11}C recovery at the system output is virtually the same as that at the target output unless long gas transmission tubes are being used, in which case the target output gas will decay significantly during transit.

For systems where the irradiation parameters differ widely from those shown in Table 7.7 care should be taken to investigate the stability of output composition under all anticipated operating conditions.

7.5 OTHER ^{11}C PRODUCTION SYSTEMS

7.5.1 System for ^{11}CO and $^{11}CO_2$ Production

It will be seen from *Figures 7.8* and *7.12* that the only essential difference between the ^{11}CO and $^{11}CO_2$ production systems using a gas target is the use of a zinc powder furnace and soda lime absorber for the conversion of the $^{11}CO_2$ to ^{11}CO. Thus the system shown in *Figure 7.8* may be modified to produce either ^{11}CO or $^{11}CO_2$, simply by directing the output from the needle valve to either the zinc furnace and soda lime (^{11}CO) or the input of flowmeter B ($^{11}CO_2$). This modification is shown in *Figure 7.14*. The two-way taps are used to ensure complete isolation of the zinc powder and soda lime. The additional needle valve is used to match the combined impedance of the zinc powder and soda lime reagents and thus maintain the sweep/target gas flow rate at a constant value irrespective of the position of the two-way taps.

7.5.2 Closed Circuit Systems

One method of maximizing the yield of product nuclei is to use a closed circuit system. In such a system the output, instead of being passed to waste, is recirculated through the target and processing reagents. One such system described by Welch and Ter-Pogossian produces ^{11}CO using a solid B_2O_3 target and a zinc furnace at 400 °C, with a sweep gas of 2 per cent CO in helium[32]. A radiochemical purity of 94 per cent ^{11}CO is claimed.

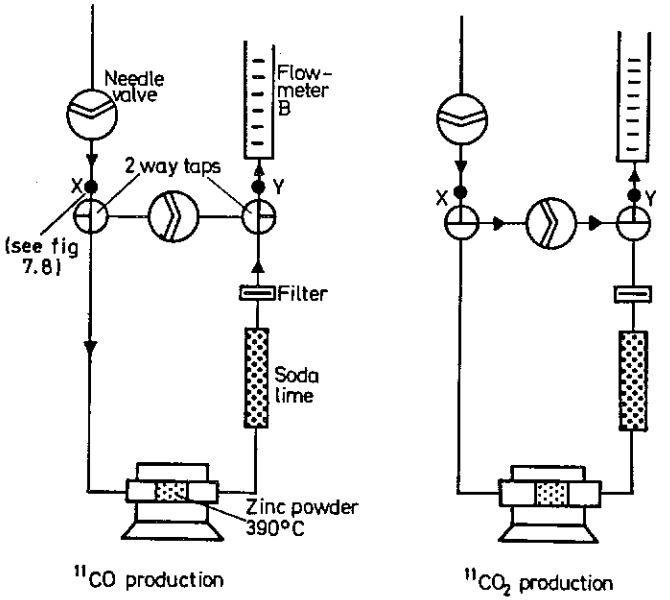

Figure 7.14 Method of modifying the ^{11}CO production system shown in *Figure 7.8* for either ^{11}CO or $^{11}CO_2$ production

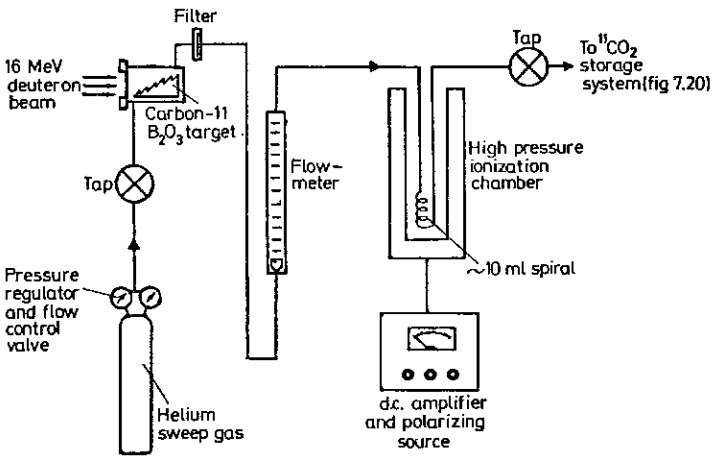

Figure 7.15 $^{11}CO_2$ 'stopped flow' system for batch-wise production using a boron trioxide wedge target

I

7.5.3 'Stopped Flow' Systems

If batch-wise production is permissible it is possible to bombard a B_2O_3 wedge target under conditions where the sweep gas is present but not flowing. When the irradiation is complete the product is flushed from the target as shown in *Figure 7.15*. Such a system is capable of producing approximately 100 mCi of $^{11}CO_2$ from a half hour 30 μA deuteron bombardment, using helium as the sweep gas. So as to collect the target effluent at maximum radioactive concentration a low temperature trap is used as the collection vessel (see section 7.6.3, page 251). ^{11}CO may also be similarly produced and stored using hydrogen as the sweep gas.

7.6 ^{11}C STORAGE SYSTEMS

The 20 min half-life of carbon-11 makes systems for the storage of this nuclide a practical proposition. Such storage systems allow the use of the nuclide away from the site of production and make for more efficient use of cyclotron running time. They are also of value when two nuclides are required simultaneously, for example ^{11}C and ^{15}O. Also, when batch-wise production is used, storage systems can be of value in reducing the level of undesired contaminants such as $^{13}N_2$. When used with the ^{11}CO and $^{11}CO_2$ production systems described in sections 7.3 and 7.4, the storage systems are capable of trapping activities of the order of 150 mCi (referred to the end of trapping time) making it possible to supply up to 6 or 7 0.5 mCi patient doses at 20 min intervals. Alternatively, the nuclide may be made available in reasonable amounts to users up to half an hour's travelling time from the point of production.

All the ^{11}C storage systems described work on the principle of trapping the labelled gas using low temperature techniques. ^{11}CO may be trapped on either activated charcoal at $-196°C$, or molecular sieve at $-72°C$. We have found the latter to be more reproducible. $^{11}CO_2$ is trapped in a copper tube at $-196°C$.

Since water vapour and some permanent gases are retained at low temperatures it is advisable to use stainless steel rather than nylon for the gas transmission tubes. This is particularly necessary when using long (approximately 100 m) transmission tubes since the amount of air and water vapour diffusing through tubes of this length quickly causes a deterioration in storage system performance.

Another factor which contributes to poor storage system performance is the use of a sweep gas containing added carrier, for example one per cent CO in helium. This leads to rapid saturation of the

adsorbent resulting in low trapped activities. It will be noted that none of the ^{11}C production systems described earlier in this chapter uses a sweep gas with added carrier.

7.6.1 ^{11}CO Storage System Using Activated Charcoal

The activated charcoal ^{11}CO storage system is shown in *Figure 7.16*. The volume of the trapping material is about 2 ml. Since nitrogen is trapped on activated charcoal at $-196°C$ this type of storage system

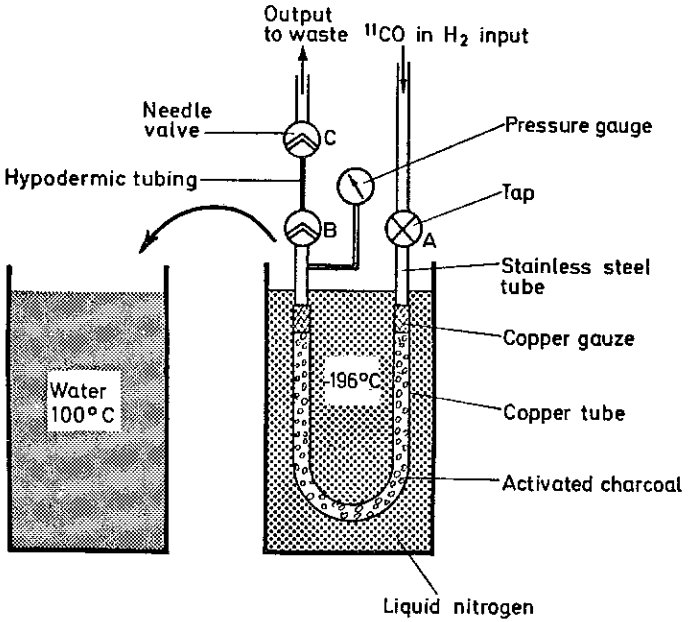

Figure 7.16 ^{11}CO storage system using an activated charcoal trap

is only suitable for use with ^{11}CO systems which do not use this as a sweep gas. Thus this storage system may be used successfully with the ^{11}CO production system described in section 7.3.2 but not with that described in section 7.3.1. The gas is passed through the storage system to waste at about 1.3 ml s^{-1} for 20 min, the trap being cooled to $-196°C$ in liquid nitrogen. Trapping efficiency is about 80 per cent. With an ^{11}CO production rate of about 0.2 mCi s^{-1} a typical trapped activity is 160 mCi of which approximately 85 per cent is released on heating the trap to about 90°C. Since some of the residual permanent gases in the system are trapped at $-196°C$ the volume of the released gas is the order of 40 ml. Thus the pressure

in the trap rises to a high value upon heating, the actual value depending upon the amount of adsorbed permanent gas and the trap dimensions. A typical value for the trap shown in *Figure 7.17* is 14 kg cm^{-2} (200 lb in^{-2}). The pressure gauge shows this and simultaneously provides an indication of remaining trapped gas when dispensing.

To dispense from the trap, the short section of hypodermic tubing is first pressurized using needle valve B (*Figure 7.16*), this volume then being transferred to a syringe using needle valve C. If sterile samples are required this dispensed volume is transferred to another syringe through a Millipore filter (see section 4.1.5, page 108). The first few millilitres dispensed are usually of low radioactive concentration due to dead volume dilution. They are therefore discarded. Thereafter it is possible to dispense by volume to within about 15 per cent of the estimated activity.

Before use, the activated charcoal is conditioned by heating to approximately 400 °C for about 15 min in an atmosphere of hydrogen flowing at 8 ml min^{-1}. The trapping efficiency will then be a maximum. After prolonged use (10 to 20 cycles) the activated charcoal may become damp, indicated by a significant fall in the trapping efficiency and also in the pressure obtained upon heating. If this occurs the activated charcoal is reconditioned *in situ* using the above technique.

The design of a practical storage system for portable use is shown in *Figure 7.17*.

7.6.2 ^{11}CO Storage System Using Molecular Sieve

The molecular sieve ^{11}CO storage system is shown in *Figure 7.18* and consists of a 27 cm length of 6 mm bore copper tubing filled with $\frac{1}{16}$ in pellets of type 13X molecular sieve.* Since nitrogen is trapped on molecular sieve at −72 °C this type of storage system is only suitable for use with ^{11}CO systems which do not use this as a sweep gas. Thus this storage system may be used successfully with the ^{11}CO production system described in section 7.3.2, but not with that described in section 7.3.1. The gas is passed through the storage system to waste at about 0.8 ml s^{-1} for 20 min the trap being cooled to −72 °C in an alcohol (IMS)† Drikold bath.‡ Trapping efficiency is about 85 per cent. With a ^{11}CO production rate of about 0.2 mCi s^{-1} a typical trapped activity is 150 mCi of which approximately 95 per cent is released on heating the trap to 90 °C. Since some

* Linde Air Products, U.S.A.
† IMS: Industrial methylated spirit.
‡ Drikold: Solid CO_2 supplied by Distillers Co. Ltd.

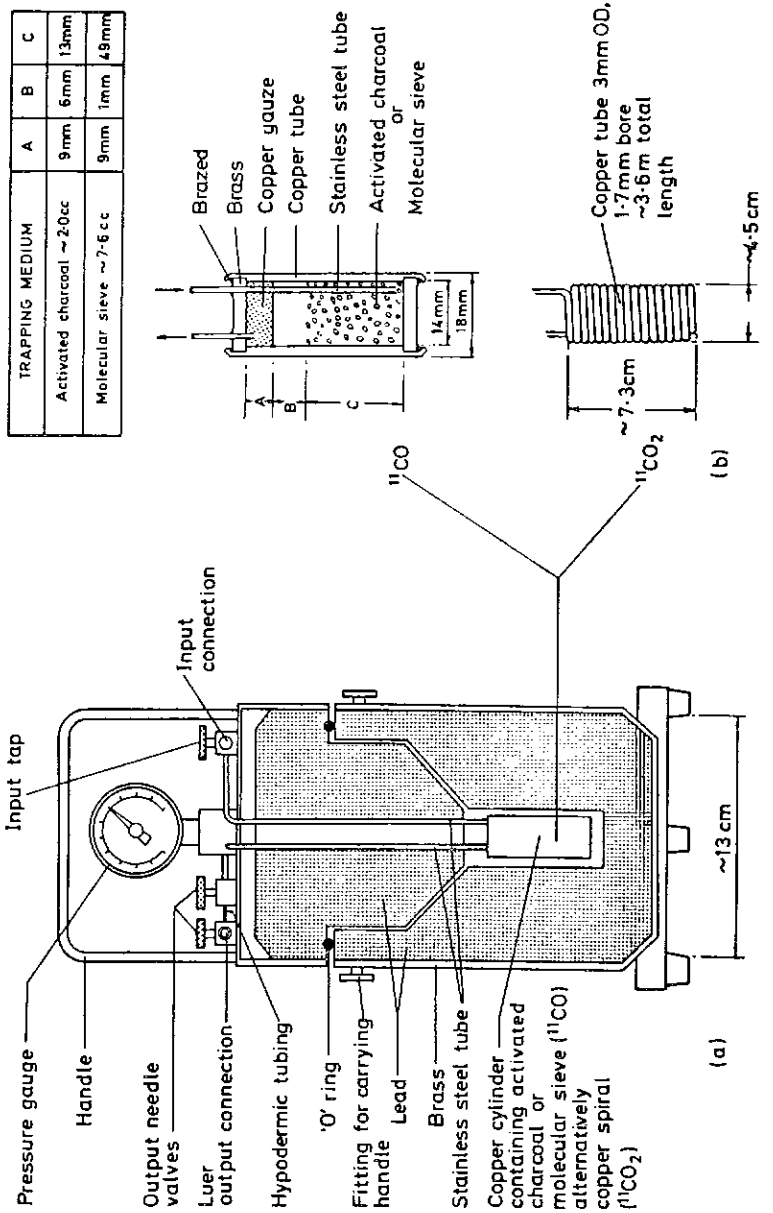

Figure 7.17 (*a*) Portable storage system for ^{11}CO or $^{11}CO_2$; (*b*) details of traps for use in portable ^{11}CO or $^{11}CO_2$ storage systems

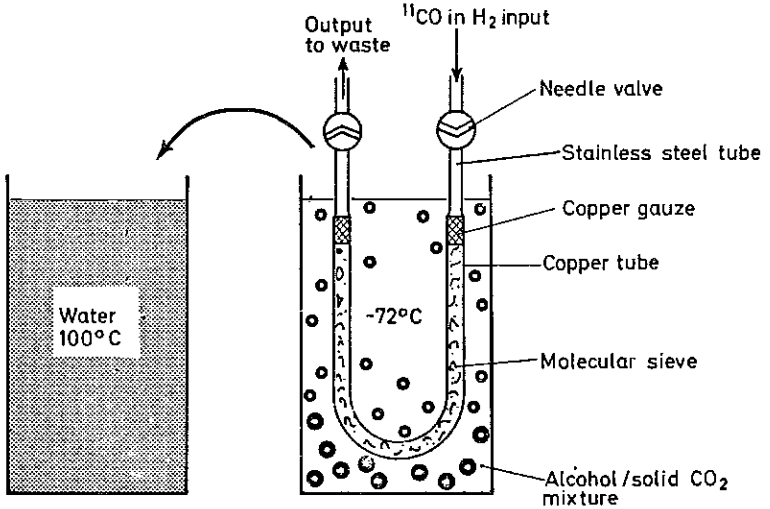

Figure 7.18 ^{11}CO storage system using a molecular sieve trap

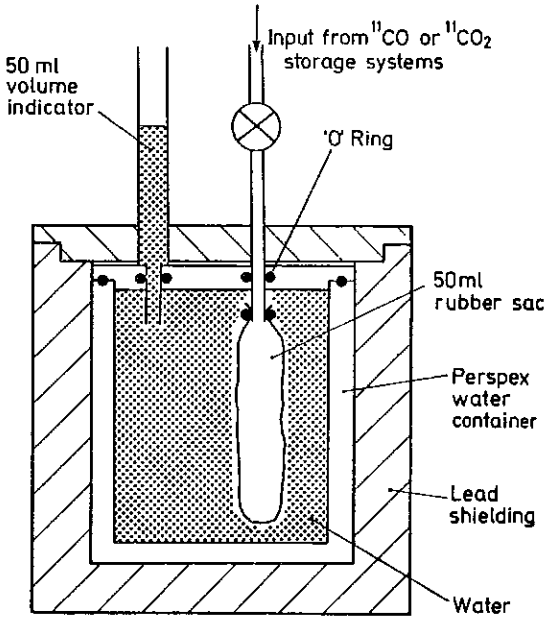

Figure 7.19 Low pressure storage unit to contain ^{11}CO or $^{11}CO_2$ released from storage systems

of the residual permanent gas in the system is trapped at −72°C, the volume of the released gas is about 7 ml. This is transferred to the low pressure storage unit shown in *Figure 7.19* by flushing the trap with ~ 40 ml of air or helium. Alternatively, if about 40 ml of air is introduced into the trap during the first two minutes of trapping, flushing becomes unnecessary since upon heating, the air together with about 90 per cent of the ^{11}CO is released directly into the low pressure storage unit. An indication of the volume of stored gas is given by a simple water displacement indicator. When

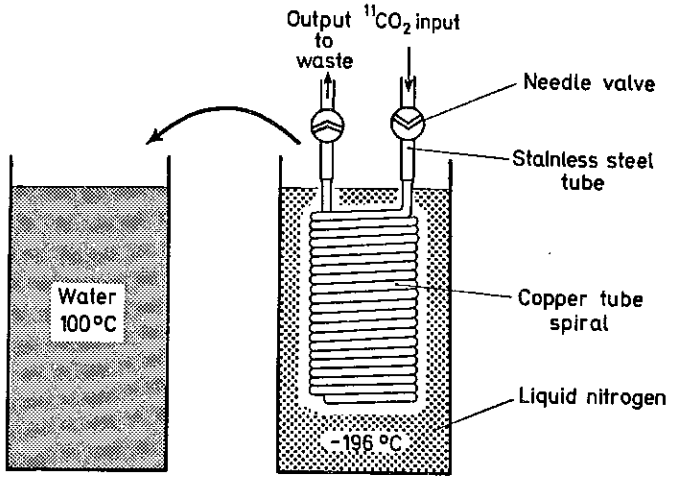

Figure 7.20 $^{11}CO_2$ storage system using a copper spiral trap

sterile samples are required they are dispensed through a Millipore filter.

The molecular sieve is conditioned *in situ* by heating to 200°C in an atmosphere of nitrogen flowing at about 10 ml min^{-1}, until it is dry; it will retain its adsorbing characteristics provided it remains dry. As with the ^{11}CO activated charcoal trap, a fall in trapping efficiency is a good indication of damp trapping material.

The design of a practical storage system for portable use is shown in *Figure 7.17*.

7.6.3 $^{11}CO_2$ Storage System

The trap for $^{11}CO_2$ shown in *Figure 7.20* consists of a 3.6 m length of empty copper tube approximately 3 mm diameter and 1.7 mm bore, formed into a closely wound spiral approximately 4.5 cm diameter and 7.3 cm long. When used in conjunction with a system

using nitrogen or helium as the sweep gas it is possible to trap $^{11}CO_2$ of high specific activity. (If the production system uses nitrogen as the sweep gas and O_2 contamination of the $^{11}CO_2$ is undesirable, it is essential to ensure that the nitrogen is 'oxygen free' since oxygen is trapped at −196°C.) In use it is similar to the ^{11}CO storage systems described. The system output gas is passed at about 1.3 ml s^{-1} through the trap which is placed in liquid nitrogen and the $^{11}CO_2$ frozen in the tube. With a $^{11}CO_2$ production rate of 0.27 mCi s^{-1}, a typical $^{11}CO_2$ trapped activity is approximately 200 mCi of which more than 95 per cent is recoverable on heating the trap to about 90°C. The released gas is flushed with 20 ml of

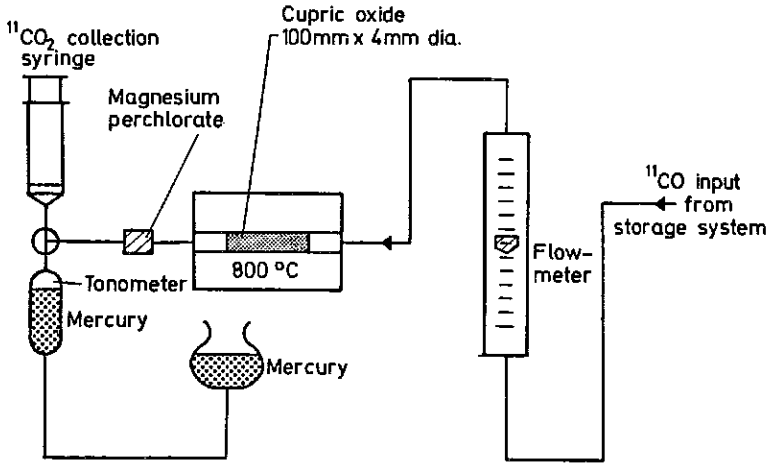

Figure 7.21 System for the batch-wise conversion of stored ^{11}CO to $^{11}CO_2$

nitrogen or helium into a low pressure storage unit as used with the ^{11}CO molecular sieve trap. When sterile samples are required they are dispensed through a Millipore filter.

A notable feature is that although the yield may contain as much as 16 per cent $^{13}N_2$ (see Table 7.3), the stored activity contains less than one per cent of this nuclide. It is essential to ensure that the trap is dry before use.

A practical $^{11}CO_2$ storage system using a copper spiral may be designed along the lines of the system shown in *Figure 7.17*.

7.6.4 $^{11}CO_2$ Batch-wise Production Using Storage Systems

Occasionally ^{11}CO and $^{11}CO_2$ are required simultaneously. Under these circumstances $^{11}CO_2$ may be supplied batch-wise using the conversion unit depicted in *Figure 7.21*, which is used to oxidize

the ^{11}CO to $^{11}CO_2$. To prepare a batch of $^{11}CO_2$ a charge of ^{11}CO is first trapped in one of the ^{11}CO storage systems described previously. The output of the storage system is then connected to the input of the conversion unit and the ^{11}CO flushed with helium through the cupric oxide furnace for 3–4 min at about 10 ml min^{-1}, to be collected in the tonometer at the furnace output as $^{11}CO_2$. To collect the $^{11}CO_2$ a 50 ml syringe is connected to the tonometer output and the gas collected by displacement with mercury. $^{11}CO_2$ radioactive concentrations of about 3 mCi ml^{-1} are readily obtained.

Since the trapped ^{11}CO contains a little hydrogen, traces of water which tend to dissolve the $^{11}CO_2$ are formed in the CuO furnace during conversion. To remove this water and thereby reduce CO_2 losses, a drying agent, magnesium perchlorate, is added at the furnace tube output.

7.7 RED CELL LABELLING WITH ^{11}CO

In the opening section of this chapter we referred to some of the many physiological uses of ^{11}CO and $^{11}CO_2$. Since one of the more routine applications is red cell labelling using ^{11}CO, we shall briefly consider some of the techniques by which this labelling is carried out.

^{11}CO production systems in which the sweep gas has added carrier should not be used for red cell labelling. The presence of CO carrier lowers the specific activity of the target effluent gas, causes inefficient red cell labelling and restricts the volume of gas used when it is administered by inhalation. Moreover, the $^{13}N_2$ contaminant level is often unacceptably high (Table 7.3). It will be noted that neither of the ^{11}CO production systems described in this chapter uses a sweep gas with added CO carrier.

In vivo red cell labelling is easily achieved using a gas sample dispensed from one of the ^{11}CO production or ^{11}CO storage systems already described. Typically this may be a volume of 1–7 ml which is injected into a 3000 ml bag containing air or oxygen. The patient breathes this gas mixture for about 30 s through a well-fitting face mask. When dispensing from a system using hydrogen as the sweep gas, the dispensed volume is limited to a maximum of 7 ml (see section 7.3.2, page 236).

In vitro red cell labelling is performed either by continuously bubbling the dispensed gas through the blood sample, or preferably by using a slowly rotating syringe containing the blood sample and the dispensed gas. The gas used for *in vitro* red cell labelling must be sterile and pyrogen free. Sterility is achieved by Millipore filtration,

whilst the risk of possible pyrogen contamination is considerably reduced by passing the gas through a small bore silica tube heated to 300 °C in which any protein fragments would be denatured. From this tube the gas flows to waste through a small sterile vessel from which samples can be withdrawn when required by piercing its soft rubber septum with a hypodermic needle.

The bubbling technique, shown in principle in *Figure 5.15* is possible only at low flow rates (~ 0.8 ml s^{-1}) since the red cells are easily haemolysed if higher flow rates are used. Foaming can also be a problem so it may also be necessary to use an antifoam agent containing silicones*[27] when labelling by this method.

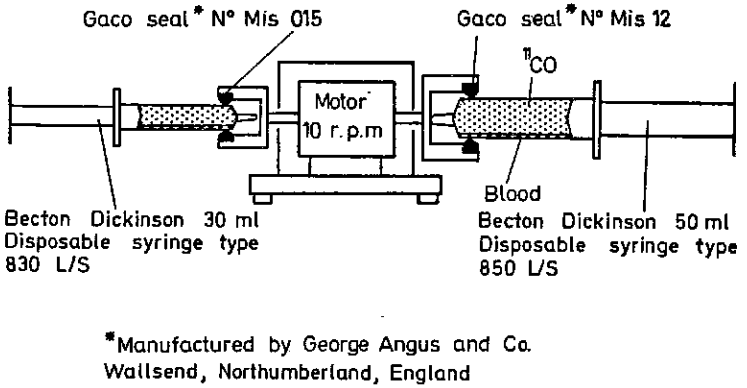

Figure 7.22 Syringe rotating device for *in vitro* red cell labelling with ^{11}CO

A much better method of red cell labelling is shown in *Figure 7.22*. A blood sample having a volume of 5–15 ml is drawn into a 30 or 50 ml syringe containing a little anticoagulant. The syringe is then filled to its maximum capacity with gas dispensed from one of the ^{11}CO production systems and sealed with a sterile blind hub. After measurement in an ionization chamber the blood and gas are mixed by rotating the syringe on its axis at 10 r.p.m. for 10–18 min. At the end of this time the syringe is again measured in the ionization chamber, after which the gas is expelled to waste. A further ionization chamber measurement is made to determine the radioactive concentration of the labelled sample. The labelling efficiency varies according to the blood sample and the mixing time; it can be as low as 25 per cent or as high as 65 per cent for a 10 min mixing period.

* DC antifoam MS A Compound or MS Antifoam Emulsion RD. Supplied by Hopkin and Williams Ltd, Essex, England.

Usually about 50 per cent of the ^{11}CO in the syringe is absorbed into the red cells. Thus a typical sample labelled by this method has a radioactive concentration of 0.25 mCi ml^{-1}.

The optimum mixing time for maximum uptake of activity is about 18 min. This is shown in *Figure 7.23*. A typical sample was mixed for 30 min, one drop of blood being taken from the syringe at 2 min intervals. The activity per unit weight at the time of sampling was determined, thus giving a measure of the labelling efficiency at

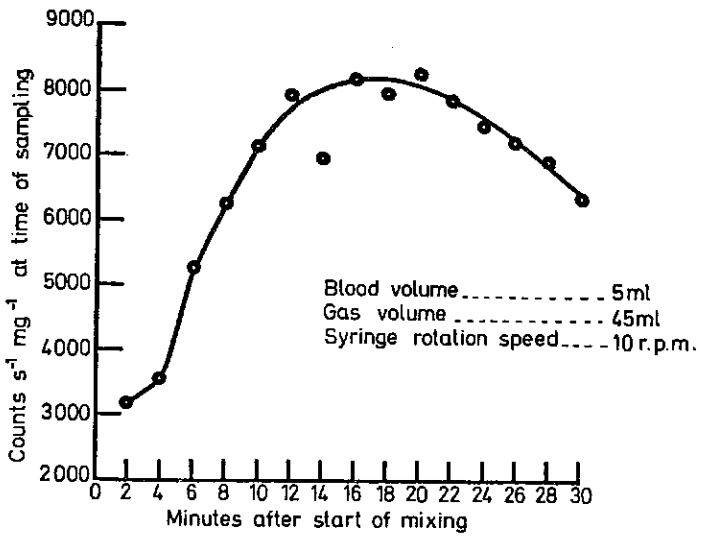

Figure 7.23 ^{11}CO *in vitro* red cell labelling: red cell activity versus mixing time

that time. The value of 18 min was confirmed by repeating the measurement using a different blood sample. In practice a 10 min mixing time is usually sufficient.

The radioactive concentration of the labelled blood can be greatly increased by using an ^{11}CO storage system. The gas is dispensed from the storage system or low pressure storage unit into a 50 ml syringe and transferred to the syringe containing the blood through a Millipore filter. Labelling is carried out as described, typical blood radioactive concentrations being the order of 7 mCi ml^{-1}.

Blood samples supplied for *in vitro* labelling and subsequent re-injection are invariably mixed with an anticoagulant such as heparin or acid citrate dextrose (ACD). When heparin is used the ratio is 0.1–0.2 mg per ml of blood. When ACD is used the ratio is 2 ml of

ACD* per 14 ml of blood. Blood samples for labelling and subsequent re-injection are not allowed to remain *in vitro* for more than 3 h at room temperature. To avoid haemolysis when handling blood it is necessary to use large bore hypodermic needles (at least 0.9 mm bore) and low flow rates when using these to transfer the samples. All dilutions should be carried out using isotonic solutions. In fact before any apparatus is used for red cell labelling it is a wise precaution to have it and the associated procedures approved by a clinician responsible for the re-administration.

7.8 ^{11}C PRODUCTION SYSTEM SELECTION

7.8.1 ^{11}CO Production Systems

The choice of ^{11}CO production system is determined principally by the charged particle beam available; the system using a gas target requires a proton beam whereas that using the B_2O_3 wedge target needs a deuteron or proton beam. Where both types of charged particle are available one has greater flexibility. For example, if the proton beam is already being used for $^{11}CO_2$ production it is possible to use the same beam for ^{11}CO production (at a moderate production rate), thus avoiding a change of particle. Alternatively if a higher production rate is required the deuteron beam would be used (see Table 7.8).

If the ^{11}CO has to be of high radiochemical purity, the gas target production system described in section 7.3.1 (page 227) is the system of choice. Since a gas target is used, no preparation of target material is necessary. However, this system does use a zinc powder furnace which has to be operated at 390 °C ± 10 °C.

As has been indicated, if a higher production rate is required it is necessary to use the B_2O_3 wedge target production system described in section 7.3.2 (page 231). However, this will be at the expense of a higher contaminant level at the system output and the need for target material preparation. No furnace is needed but one does have a 'thermal threshold' in the yield/beam characteristic (*Figure 7.4*). With this system hydrogen is used as the sweep gas; by varying the flow rate between prescribed limits the radioactive concentration of the ^{11}CO at the system output may be varied during bombardment.

7.8.2 $^{11}CO_2$ Production Systems

Since both types of $^{11}CO_2$ production system use a proton beam

* ACD to National Institute of Health formula A: trisodium citrate, dihydrate, 2.2 g; citric acid, 0.8 g; dextrose, 2.5 g; water to 100 ml.

TABLE 7.8

COMPARATIVE PERFORMANCE OF ^{11}C PRODUCTION SYSTEMS

Production system	*Typical ^{11}C production at system output*		*Remarks*
	mCi s^{-1}	mCi ml^{-1} 760 mm Hg 20 °C	
^{11}CO N_2 gas target $^{14}N(p,\alpha)^{11}C$	0.14	0.10	Simple target design No preparation of target material High purity of product Zinc powder furnace required Beam power density (beam distribution) not critical provided concentrated beam is not used
^{11}CO B_2O_3 wedge target $^{10}B(d,n)^{11}C$ $^{11}B(d,2n)^{11}C$	0.21	0.15	Target material requires preparation High production rate Moderate purity of product No furnace required Thermal threshold in yield/beam characteristic Beam power density not critical provided concentrated beam is not used
$^{11}CO_2$ N_2 gas target $^{14}N(p,\alpha)^{11}C$	0.27	0.20	Simple target design No preparation of target material High production rate High purity of product No furnace or absorbers required Beam power density not critical provided concentrated beam is not used
$^{11}CO_2$ B_2O_3 wedge target $^{11}B(p,n)^{11}C$	0.11	0.084	Target material requires preparation Moderate production rate No furnace or absorbers required Thermal threshold in yield/beam characteristic Beam power density not critical provided concentrated beam is not used

and neither needs any furnace or absorbers, the choice is determined mainly by the system's performance. The system using a gas target (section 7.4.1, page 237) has a much higher production rate and a slightly higher purity of product than that using the B_2O_3 wedge target (section 7.4.2, page 241). This, together with the simplicity of target design and no need for target material preparation, makes this the $^{11}CO_2$ production system of choice for nearly every application. The B_2O_3 wedge target production system is of value when a low pressure system is required or where only this type of target is available.

The beam power density (beam distribution) is not critical for any of the ^{11}C production systems provided the use of concentrated high current beams is avoided. The comparative performance of the ^{11}C production systems is given in Table 7.8.

REFERENCES

1 Bewley, D. K., Field, S. B. and Parnell, C. J. (1967). 'Physical aspects of the deuteron and helium nuclei beams from the M.R.C. cyclotron.' *Physics in Med. and Biol.* **12**, 1, 1–12.

2 Buckingham, P. D. and Forse, G. R. (1963). 'The preparation and processing of radioactive gases for clinical use.' *Int. J. Appl. Radiation and Isotopes* **14**, 439–45.

3 Christman, D. R., Hoyte, R. M. and Wolf, A. P. (1970). 'Organic radiopharmaceuticals labelled with isotopes of short half-life 1: ^{11}C—1—Dopamine Hydrochloride.' *J. Nuclear Med.* **11**, 8, 474–8.

4 Clark, J. C. and Buckingham, P. D. (1971). 'The preparation and storage of carbon-11 labelled gases for clinical use.' *Int. J. Appl. Radiation and Isotopes* **22**, 639–46.

5 Clark, J. C. and Buckingham, P. D. (1971). 'The preparation of carbon-11 labelled carbon monoxide and carbon dioxide.' *Radiochem. and Radioanalyt. Letters* **6**, 5, 281–6.

6 Clark, J. C., Glass, H. I. and Silvester, D. J. (1966). 'In vitro labelling of red cells with carbon-11.' *Proceedings of the Second International Conference on Methods of Preparing and Storing Labelled Compounds, Brussels, Nov./Dec. 1966.*

7 Clark, J. C., Matthews, C. M. E., Silvester, D. J. and Vonberg, D. D. (1967). 'Using cyclotron produced isotopes at Hammersmith Hospital.' *Nucleonics* **25**, 6, 54–62.

8 Comar, D., Maziére, M., and Crouzel, C. (1973). 'Synthese et metabolisme de molecules radiopharmaceutiques marquees a carbone-11. I—Iodomethylate de chlorpromazine—^{11}C.' *Proceedings of IAEA/WHO Symposium on New Developments in Radiopharmaceuticals and Labelled Compounds*, Copenhagen, March 1973. ST1/PUB/344 Vol I.

9 Coward, H. F. and Jones, G. W. (1952). *Limits of Flammability of Gases and Vapours.* Bulletin 503, Bureau of Mines, Government Printing Office, Washington 25, D.C., U.S.A.

10 Dillman, L. T. (1970). 'Radionuclide decay schemes and nuclear parameters for use in radiation dose estimation, Part 2.' *J. Nuclear Med.* (Medical Internal Radiation Dose Committee) **11**, Suppl. 4, pamphlet No. 6.

11 Finn, R. D., Christman, D. R., Ache, H. J. and Wolf, A. P. (1971). 'The preparation of cyanide—^{11}C for use in the synthesis of organic radiopharmaceuticals II.' *Int. J. Appl. Radiation and Isotopes* **22**, 735–44.

12 Finn, R. D. and Wolf, A. P. (1972). 'Cyclotron preparation of ^{11}C—carbon dioxide from a nitrogen gas target.' *J. Nuclear Med.* **13**, 6, 429. (Abstract.)

13 Friedlander, G., Kennedy, J. W. and Miller, J. M. (1966). *Nuclear and Radiochemistry*, 2nd edn, p. 61. New York; Wiley.

14 Gelbard, A. S., Hara, T., Tilbury, R. S. and Laughlin, J. S. (1973). 'Recent aspects of cyclotron production of medically useful isotopes.' *Proceedings of IAEA/WHO Symposium on New Developments in Radiopharmaceuticals and Labelled Compounds*, Copenhagen, March 1973. ST1/PUB/344 Vol I.

15 Glass, H. I., Brant, A., Clark, J. C., De Garreta, A. C. and Day, L. G. (1968). 'Measurement of blood volume using red cells labelled with radioactive carbon monoxide.' *J. Nuclear Med.* **9**, 11, 571–5.

16 Glass, H. I., De Garreta, A. C., Lewis, S. M., Grammaticos, P. and Szur, L. (1968). 'Measurement of splenic red-blood-cell mass with radioactive carbon monoxide.' *Lancet* **1**, 669–70.

17 Glass, H. I., Edwards, R. H. T., De Garreta, A. C. and Clark, J. C. (1969). '^{11}CO red cell labelling for blood volume and total hemaglobin in athletes: effect of training.' *J. Appl. Physiol.* **26**, 1, 131–4.

18 Glass, H. I., Jacoby, J., Westerman, B., Clark, J. C., Arnot, R. N. and Dixon, H. G. (1968). 'Placental localization by inhalation of radioactive carbon monoxide.' *J. Nuclear Med.* **9**, 9, 468–70.

19 Glass, H. I. and Silvester, D. J. (1970). Review Article: 'Cyclotrons in nuclear medicine.' *Br. J. Radiol.* **43**, 589–601.

20 Huston, H. L. and Norrish, T. H. (1948). 'Production of radioactive carbon monoxide and phosgene from barium carbonate.' *J. Am. Chem. Soc.* **70**, 1968–9.

21 Kasche, V. (1970). 'Production and purification of ^{11}C and ^{13}N labelled α-chymotrypsin.' *Radiochem. and Radioanalyt. Letters* **3**, 1, 51–6.

22 Lamb, J. F., James, R. W. and Winchell, H. S. (1971). 'Recoil synthesis of high specific activity ^{11}C-cyanide.' *Int. J. Appl. Radiation and Isotopes* **22**, 475–9.

23 More, R. D. and Troughton, J. H. (1972). 'Production of ^{11}C with a 3 MeV Van-de-Graaf accelerator.' *Int. J. Appl. Radiation and Isotopes* **23**, 344.

24 Myers, W. G. (1972). '^{11}C-acetylene.' *J. Nuclear Med.* **13**, 9, 699.

25 Myers, W. G. and Hunter, W. W. (Jr) (1967). 'Radiocarbon-11 for scanning.' *J. Nuclear Med.* **8**, 305. (Abstract.)

[26] Ritchie, A. I. M. (1968). 'The production of the radioisotopes ^{11}C, ^{13}N and ^{15}O using the deuteron beam from a 3 MeV Van-de-Graaf accelerator.' *Nuclear Instrmnts and Methods* **64**, 181–4.
[27] *Silicones for Use in Medicine*, p. 3. Romford, England; Midland Silicones Ltd & Hopkin and Williams Ltd (1962).
[28] Tilbury, R. S., Dahl, J. R. and Laughlin, J. S. (1971). 'Cyclotron production of radioactive gases.' *J. Nuclear Med.* **12**, 6, 468. (Abstract.)
[29] Tilbury, R. S., Dahl, J. R., Monahan, W. G. and Laughlin, J. S. (1971). 'The production of ^{13}N labelled ammonia for medical use.' *Radiochem. and Radioanalyt. Letters* **8**, 6, 317–23.
[30] Tilbury, R. S., Mamacos, J. P. and Laughlin, J. S. (1970). 'Initial experience with a 30 in isochronous cyclotron for medical use.' *In Uses of Cyclotrons in Chemistry, Metallurgy and Biology*, p. 117. (Ed. by C. B. Amphlett) London; Butterworths.
[31] Vonberg, D. D., Baker, L. C., Buckingham, P. D., Clark, J. C., Finding, K., Sharp, J. and Silvester, D. J. (1970). 'Target systems for radioisotope production on the Medical Research Council cyclotron.' In *Uses of Cyclotrons in Chemistry, Metallurgy and Biology*, p. 258. (Ed. by C. B. Amphlett) London; Butterworths.
[32] Welch, M. J. and Ter-Pogossian, M. M. (1968). 'Preparation of short half-lived radioactive gases for medical studies.' *Radiation Res.* **36**, 3, 580–7.
[33] West, J. B. (1964). 'Pulmonary function studies with ^{15}O, ^{11}C and ^{13}N.' U.S.A.E.C., Report TID-7678, pp. 213–36.
[34] West, J. B. (1967). 'The use of radioactive materials in the study of lung function. UKAEA Medical Monograph No. 1, revised edn. Amersham, England; The Radiochemical Centre.
[35] Winstead, M., Lin, T. H., Khentigan, A., Lamb, J., Myers, W., Fleischer, A. and Winchell, H. S. (1973). 'Synthesis and evaluation of ^{11}C labelled organic compounds for use in nuclear medicine.' *Proceedings of IAEA/WHO Symposium on New Developments in Radiopharmaceuticals and Labelled Compounds*, Copenhagen, March 1973. ST1/PUB/344 Vol I.
[36] Winstead, M. B., Winchell, H. S. and Fawwaz, R. A. (1969). 'The use of sodium ^{11}C-benzoate in renal visualization.' *Int. J. Appl. Radiation and Isotopes* **20**, 859–63.
[37] Winstead, M. B., Winchell, H. S., Fawwaz, R. A. and Lawrence, J. H. (1970). 'Use of ^{11}C-carboxylates in organ visualization.' *J. Nuclear Med.* **11**, 6, 279. (Abstract.)
[38] Wolf, A. P., Christman, D. R., Fowler, J. S. and Lambrecht, R. M. (1973). 'Synthesis of radiopharmaceuticals and labelled compounds utilizing short-lived isotopes.' *Proceedings of IAEA/WHO Symposium on New Developments in Radiopharmaceuticals and Labelled Compounds*, Copenhagen, March 1973. ST1/PUB/344 Vol I.

Radionuclides of the rare gases: Krypton-79, Krypton-85m, Krypton-81m, Xenon-135 and Xenon-127

8.1 INTRODUCTION

Almost all clinical applications of radioactive rare gases have been in the study of organ blood flow or perfusion by the administration of solutions of the rare gases arterially into the organ of interest. For some organs, methods have been developed where the arterial administration has been replaced by a less traumatic rebreathing procedure followed by a period of desaturation or wash-out[4,16,17,21,30,35,48].

Organs including the brain[3,4,18,19,20,27,30,35,39,44], lung[10,23,36,48,50], heart[9,23,29,32,41], kidney[7,11], spleen[12,16,49], liver[45], placenta[21,38], and tissues including muscle[26] and tumours[8] have been studied using one or both of these methods. Most of these investigations have been carried out with the commercially available radionuclides ^{133}Xe and ^{85}Kr. However, radiation emitted by these nuclides is often far from ideal for *in vivo* measurements. For example ^{85}Kr emits largely β particles, the 514 keV gamma ray being only 0.41 per cent abundant. This effectively means that any *in vivo* measurements must be carried out either using β particle sensitive detectors on the surface of the exposed organ, or by implantation of β sensitive probes. This of course means that any measurement involves a significant surgical undertaking.

^{133}Xe emits 81 keV gamma rays that may be detected outside the body using a suitable gamma sensitive detector, usually a NaI(Tl) scintillation counter. However, the 81 keV gamma ray photons are rather readily attenuated, the half thickness in tissue being ~ 7 cm; this results in measurements being difficult to carry out in deep-lying organs. A further disadvantage of the 81 keV gamma ray is the fact that it may undergo large angle compton scattering with little loss of

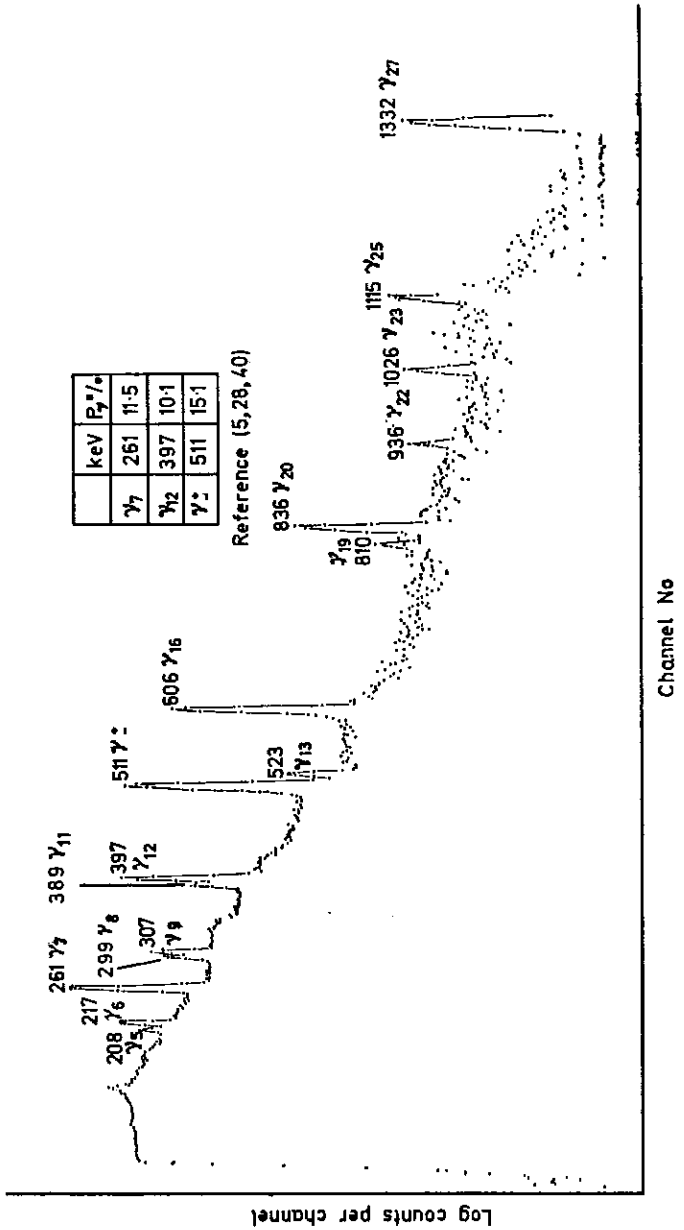

Figure 8.1 Krypton-79 gamma ray spectrum and list of some gamma ray emission probabilities

energy. This makes the location of discrete areas of organs for detailed studies difficult or even impossible[3,39,44]. The exploitation of other radionuclides of the rare gases with both shorter and longer half-lives has largely been aimed at attempting to overcome these drawbacks, by the selection of nuclides with somewhat higher gamma ray emission energies. In particular some potential applications of xenon-135 ($T_{\frac{1}{2}} = 9.2$ h)[36] and xenon-127 ($T_{\frac{1}{2}} = 36.4$ d)[3], krypton-79 ($T_{\frac{1}{2}} = 35$ h)[30], krypton-85m ($T_{\frac{1}{2}} = 4.4$ h)[18], and krypton-81 m ($T_{\frac{1}{2}} = 13$ s)[4,10,22,23,24,25,50] have been investigated and it is the preparation of these radionuclides that this chapter is devoted to.

8.2 KRYPTON-79

8.2.1 Introduction

Decay Properties

This nuclide has the longest half-life ($T_{\frac{1}{2}} = 35$ h) of the useful gamma emitting krypton radionuclides, and a rather complex decay scheme[5,28,40]. A typical gamma ray spectrum (plotted semi-logarithmically) obtained using a Ge/Li spectrometer is shown in *Figure 8.1* (see section 8.3.5, page 277). The most abundant gamma rays will be seen at 261, 397 and 511 keV. A list of transition probabilities for these gamma rays is also shown in *Figure 8.1*.

Methods of Production

Krypton-79 may be prepared by the deuteron or proton irradiation of targets containing bromine, by the $^{79}Br(d,2n)^{79}Kr$ and $^{79}Br(p,n)^{79}Kr$ reactions. Other reactions that have been used include the neutron or deuteron irradiation of krypton by the $^{78}Kr(n,\gamma)^{79}Kr$ and $^{78}Kr(d,p)^{79}Kr$ reactions respectively (see section 8.3.2, page 273). The deuteron or proton irradiation of bromine should be considered whenever high specific activity and radionuclidic purity are required.

8.2.2 Target System Using Sodium Bromide for Krypton-79 Production

Target Design

Any anhydrous bromide that is water soluble may in principle be used for the production of ^{79}Kr. It may be irradiated either as a powder pressed into grooves in a cooled backing plate as shown in *Figure 8.2* (see also section 2.2.1, page 25, *Figure 2.5*), or as a layer

melted onto a suitable backing plate. The latter type of target has several advantages when compared with the powder target. It is mechanically more robust and readily lends itself to remote handling methods. The melted target is also less prone to thermal damage during irradiation, an important factor as the rare gas product is readily released from the molten halide.

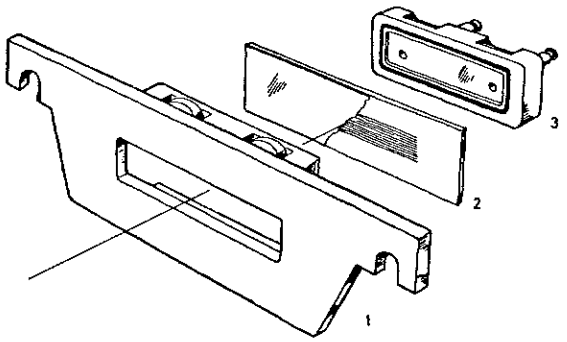

Figure 8.2 (a) Target holder for powdered or melted salt targets: (1) Target mounting plate; (2) target plate carrying target material with target foil shown cut away; (3) target cooling block with 'O' ring

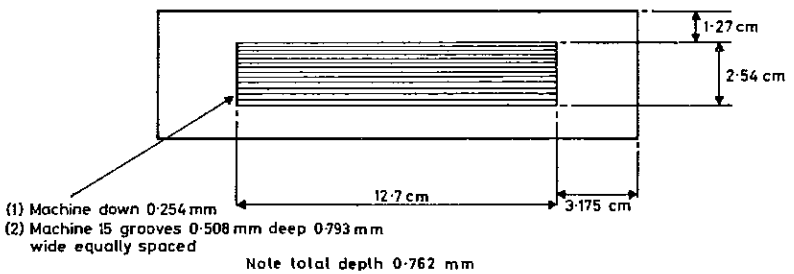

Figure 8.2 (b) Grooved copper target plate for powdered and melted salts

Target Preparation

For irradiations with 16 MeV deuterons ~ 4 g of NaBr is melted into a grooved depression 2.5 cm wide, 12.5 cm long and 0.8 mm deep machined into a 5 cm wide, 18 cm long copper plate 3 mm thick. Melting of the dry NaBr is carried out under hydrogen to avoid oxidation of the copper, using an eddy current heater.

The maximum safe operating deuteron beam current is critically dependent upon the beam power distribution (see section 2.4, page

40) and careful monitoring of this is essential if much production effort is not to be lost by a chance melting of the target material.

Alternative Target Materials

The deuteron irradiation of NaBr simultaneously produces large amounts of ^{24}Na ($T_{\frac{1}{2}}$ = 15 h), by the ^{23}Na(d,p)^{24}Na reaction and ^{82}Br ($T_{\frac{1}{2}}$ = 35.3 h) by the ^{81}Br(d,p)^{82}Br reaction. This may lead to a serious handling problem. An approach avoiding this problem would be to use a proton beam. Alternatively LiBr could be used with protons or deuterons. A little ^{7}Be ($T_{\frac{1}{2}}$ = 53 d) would then be made by the ^{7}Li(p,n)^{7}Be and ^{7}Li(d,2n)^{7}Be reactions, but the radiation hazard during handling would be greatly reduced. Bromine-82 would remain a problem in all deuteron irradiations.

Yields

'On target yields' may be estimated with little difficulty in the case of powder targets as follows. A small representative sample of the NaBr powder, which can be recovered almost quantitatively after irradiation, is sealed in an ampoule. After allowing some time (~ 100 h) for most of the ^{24}Na to decay, the ^{79}Kr content of the sample is assayed using a Ge/Li gamma ray spectrometer (see section 8.3.5, page 277).

Table 8.1 (*a*) shows the results obtained for two short irradiations carried out with low beam currents when thermal damage and ^{79}Kr loss should be minimal, together with data for production irradiations carried out with a 30 μA beam current. It can be seen that when the beam current is increased and longer irradiations are carried out the 'on target yield' falls considerably.

Directly comparable values for melted NaBr targets cannot be obtained as it is exceedingly difficult to obtain a representative sample of the irradiated target material. Table 8.1 (*b*) shows some data for 'recovered yields' obtained with melted targets under similar irradiation conditions to those used for the powder target comparison. It can be seen that generally the performance of the melted target is superior to that of the powder target. Together with the advantages in handling, this makes the melted target the one of choice for ^{79}Kr production using presently developed techniques.

Future Developments

Neither of the target systems described above can be considered to be ideal. Further development of target systems that specifically make use of the apparent ease with which the ^{79}Kr is lost from the NaBr during irradiation, would seem appropriate. Perhaps, if

among other problems, the severe problem of corrosion could be overcome, either strong aqueous solutions[31] or even melts containing NaBr, could be used to advantage with the continuous purging of the target by a suitable sweep gas.

TABLE 8.1 (*a*)

'ON TARGET YIELDS' OF ^{79}Kr OBTAINED IN 16 MeV DEUTERON IRRADIATIONS OF POWDER NaBr TARGETS

Irradiation no.	μA	μAh	*Irradiation time* h	*On target yield* mCi μAh^{-1}
1	10	1	0.1	1.1
2	10	1	0.1	1.4
3	30	30	1.0	0.66
4	30	30	1.0	0.40

TABLE 8.1 (*b*)

'RECOVERED YIELDS' OF ^{79}Kr FROM 16 MeV DEUTERON IRRADIATIONS OF MELTED NaBr TARGETS

Irradiation no.	μA	μAh	*Irradiation time* h	*Recovered yield* mCi μAh^{-1}
5	10	1	0.1	1.2
6	10	1	0.1	0.7
7	30	30	1.0	1.2
8	30	30	1.0	1.0

8.2.3 Recovery of Krypton-79 from Sodium Bromide Targets

General Principles

The ^{79}Kr is readily released from the NaBr target material by dissolution of the latter in water. The dissolution must be carried out in a closed system with facilities for purging the solution with a suitable purge gas. If dilute air/krypton mixtures are required, air is suitable for this purpose. If, however, high radioactive concentrations are required, carbon dioxide is the purge gas of choice as it is readily removed from the product by absorption in NaOH solution. *Figure 8.3* shows a schematic diagram of a system for recovering ^{79}Kr from a melted NaBr target.

Target Dissolver

The target dissolver consists of a Perspex cell fitted with a soft sealing 'O' ring fabricated from silicone rubber tubing 7 mm OD and 3 mm bore. This cell is brought into contact with the target

face by means of a small air powered press shown schematically in *Figure 8.4*. By applying vacuum or pressure to the rubber diaphragms the target loading platform may be lowered or raised. In the raised position a gas-tight seal is readily achieved. The target dissolver may be tilted about the pivot.

Recovery System

The recovery system for the product is of a similar design to that used for the recovery of $^{13}N_2$ from CO_2 and is fully described in section 6.3.1, page 191.

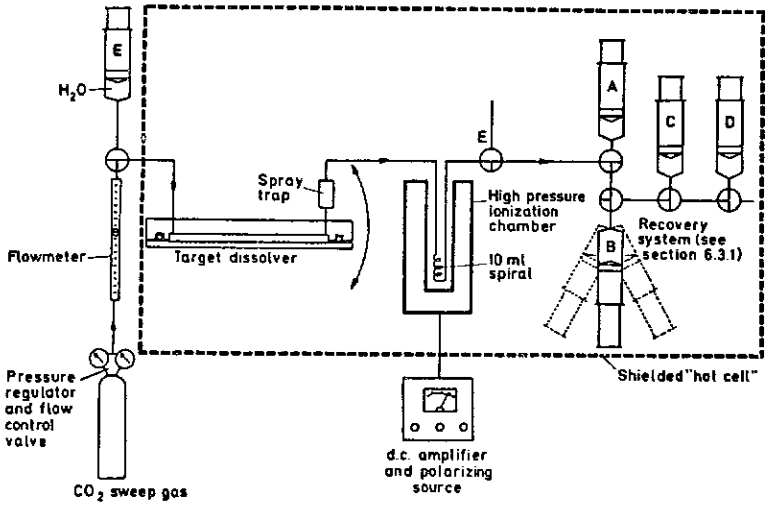

Figure 8.3 Krypton-79 and xenon-127 recovery system

Operating Procedure

The recovery system is prepared, as described in section 6.3.1 for the recovery of gas samples, and connected to the target dissolver. The part of the system within the dotted box in *Figure 8.3* is installed inside a shielded and ventilated enclosure fitted with remote handling facilities. The irradiated target is installed in the dissolver and the air displaced by purging with carbon dioxide to waste, the waste gas being allowed to escape through tap E. After allowing sufficient time for the air to be displaced, typically 10 min at a CO_2 flow rate of 1 ml s^{-1}, the tap E is closed and the integrity of all seals and connections checked by observing the flowmeter. The reading of the flowmeter should fall to zero if the system has no leaks. It should be noted at this point that the CO_2 pressure set by the pressure

regulator should not be in excess of 0.35 kg cm^{-2} (5 lb in^{-2}), otherwise the large area sealed off in the target dissolver will give rise to an unnecessary stress in its components. After this test has

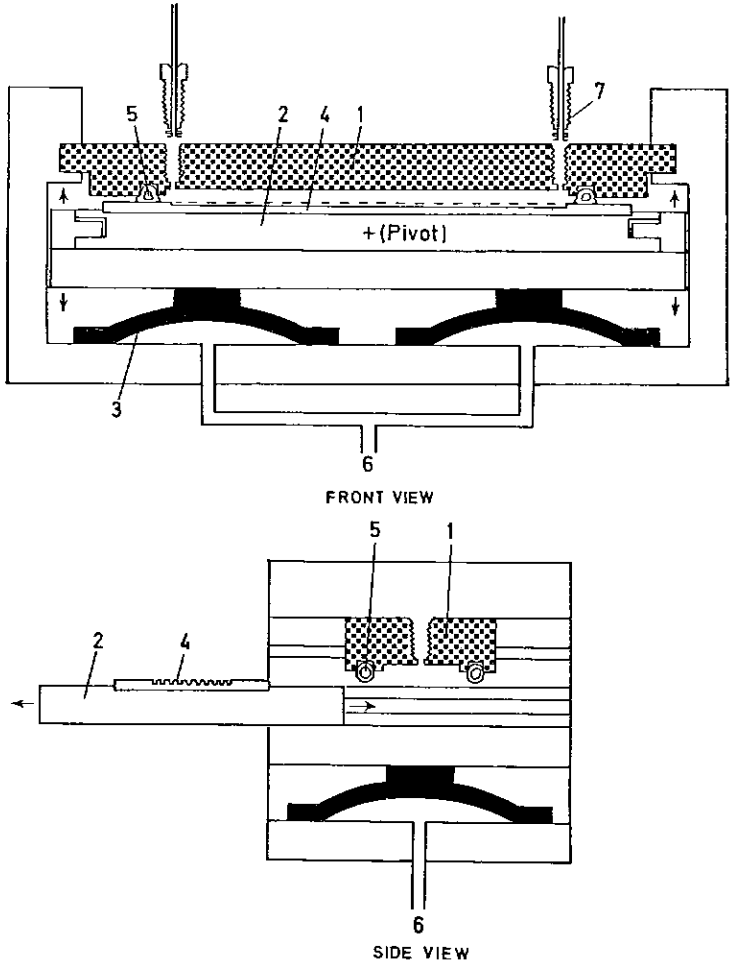

Figure 8.4 Target dissolver: (1) Perspex cell; (2) target loading platform; (3) rubber diaphragms (Saunders Valve Co. type A $1\frac{1}{2}''$ H); (4) target plate; (5) silicone 'O' ring; (6) air/vacuum connection; (7) 'Cheminert' fitting to flanged $\frac{1}{16}''$ OD PTFE tubing

been satisfactorily carried out the pressure is released and the target dissolver tilted so that the CO_2/water inlet is in the lowest position. Water (~ 10 ml) is then introduced from the syringe E situated

outside the shielding and the dissolver gently rocked until the target material has dissolved. The dissolver is again tilted so that the CO_2/water inlet is in the lowest position and CO_2 introduced slowly at ~ 0.5 ml s^{-1} to drive the gaseous product into the recovery system. The sodium bromide solution remains in the dissolver. The shaking machine is operated continuously to absorb the carbon dioxide. After a suitable time, typically 5 min, the carbon dioxide flow is stopped and the residual bubble containing the product in syringe B is manipulated in a similar way to that described for $^{13}N_2$ gas samples in section 6.3.1, page 199. The actual time taken to drive out the gaseous product is best determined experimentally by making observations of the response of the ionization chamber.

8.2.4 Dispensing

Sample Measurement by Ionization Chamber

Samples of ^{79}Kr are conveniently dispensed into disposable syringes to be subsequently measured in a high pressure ionization chamber.

The ionization chamber may conveniently be calibrated for each production run using data obtained during the quality control procedure (see below and section 8.3.4, page 276).

Samples Suspected to be Impure at Time of Dispensing

If during the quality control procedure involving gamma ray spectroscopic assay any permissible levels of impurities are detected, the measurement of dispensed samples should be carried out using the modified procedure described in section 8.3.4 (page 277).

Dispensing by Volume

If the volumes of the dispensed samples are larger than the ionization chamber can accommodate within its sensitive region, dispensing by volume must be carried out as fully described in section 8.3.4 (page 276).

Sample Losses due to Diffusion into Container Materials

It is essential, in all dispensing procedures for rare gases, to establish the extent of diffusion losses into any non-metallic container materials being used. Although disposable plastic syringes are invaluable for dispensing these inert gases, they have been found to remove some of the rare gas from the gas phase. Losses will also be encountered if greased glass syringes are used. Thus remeasure-

ment of the syringe after gas discharge is recommended whenever a quantitative estimation of the dose used is required.

8.2.5 Quality Control

Radionuclidic Purity

The radionuclidic purity of ^{79}Kr samples is best established using a Ge/Li gamma ray spectrometer.

Although the gamma ray spectrum obtained for ^{79}Kr is quite complex (see *Figure 8.1*) it is usually possible to identify any foreign photopeaks by comparison with a reference spectrum obtained from a source that has been rigorously investigated to establish that all observed photopeaks decay with the same half-life.

It is desirable that as part of the development of any production system, all conceivable sources of radionuclidic impurities, from the irradiating particle to the dispensing procedure, should be rigorously investigated. The background information so obtained, even though much of it may be negative in nature, is a great asset when diagnosing the cause of the appearance of a radionuclidic impurity.

Chemical Purity

The foregoing comments also refer to the subject of chemical purity. In general, however, chemical problems are not likely to be severe in the case of rare gas preparations. As the final sample is in the gas phase, the number of possible impurities is rather limited.

In the preparation of ^{79}Kr gas samples by the method described in section 8.2.3, the composition of the final sample is usually found, gas chromatographically, to be traces of air together with a small excess of carbon dioxide. As with the case of $^{13}N_2$ solution preparation, described in section 6.3.1, the rigorous exclusion of this air is necessary if solutions of ^{79}Kr are to be prepared. Finally, it should be noted that provided the operating sequence of the recovery system is adhered to, any traces of aqueous material that find their way into the final gas sample should be free from sodium hydroxide. A simple test to establish that this is true is to apply a small quantity of the liquid to a wide range pH test paper and observe its response.

8.3 KRYPTON-85m

8.3.1 Introduction

Decay Properties

This radionuclide of krypton has a half-life of 4.4 h and emits β particles and gamma rays. A simplified decay scheme is shown in

Figure 8.5. It can be seen that 150 keV and 305 keV gamma rays are emitted in 74 and 13 per cent of the disintegrations respectively[28].

Both these energies are suitable for external detection in clinical work.

Methods of Production

With the methods of production presently available it is only possible to use $^{85}Kr^m$ in the gas phase. These production methods use either the $^{84}Kr(d,p)^{85}Kr^m$ or the $^{84}Kr(n,\gamma)^{85}Kr^m$ reactions.

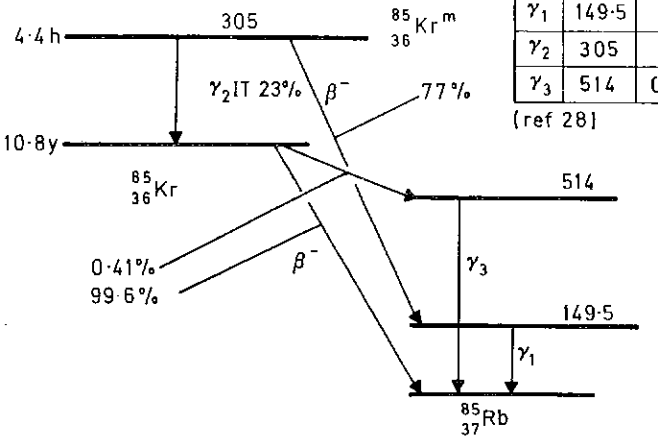

	keV	Pγ %
γ_1	149·5	74
γ_2	305	13
γ_3	514	0·41

(ref 28)

Figure 8.5 Simplified krypton-85m decay scheme

Both suffer from the same basic disadvantage that it is impossible to achieve either high radionuclidic purity or high specific activity. This is due to the simultaneous production of large quantities of ^{87}Kr ($T_{\frac{1}{2}}$ = 76 min) by the $^{86}Kr(d,p)^{87}Kr$ or $^{86}Kr(n,\gamma)^{87}Kr$ reactions and not insignificant quantities of ^{79}Kr by the $^{78}Kr(d,p)^{79}Kr$ and $^{78}Kr(n,\gamma)^{79}Kr$ reactions. However, by careful choice of decay times after the end of production, the interference in measurements by these impurities can be minimized. Only the production of $^{85}Kr^m$ with an accelerator using the $^{84}Kr(d,p)^{85}Kr^m$ reaction will be considered here. The target system using the (n,γ) reaction would have to be designed with the available reactor space in mind and the possible neutron fluxes available. However, the handling methods and approach to quality control could be quite similar for either accelerator or reactor production.

8.3.2 Target System for Cyclotron Production of $^{85}Kr^{m}$

Target Design, Construction and Operation

The target used to produce $^{85}Kr^{m}$ by the 16 MeV deuteron irradiation of krypton is shown schematically in *Figure 8.6*. It is a fabricated aluminium vessel 45 cm long with a cross section of 12.5 cm × 2.5 cm, the same size as the deuteron beam exit port of the MRC cyclotron. In order to fully degrade the energy of the deuterons within the vessel, it is filled to a pressure of 0.7 kg cm^{-2}

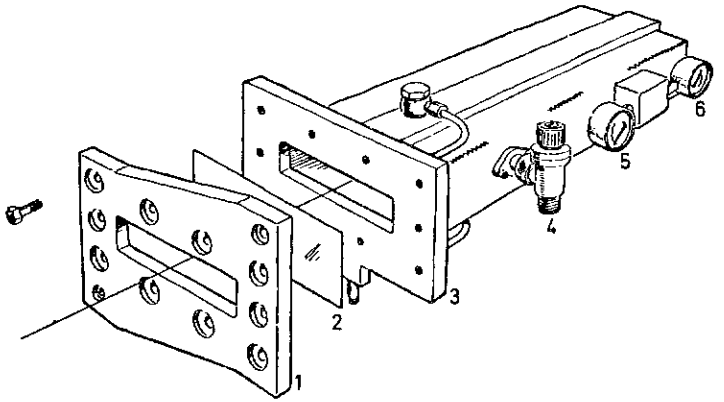

Figure 8.6 Krypton-85m target: (1) Target mounting plate; (2) foil window 0.025 mm stainless steel EN58B; (3) water cooled gas tight target box; (4) gas connection; (5) pressure gauge; (6) vacuum gauge

(10 lb in^{-2}) gauge with approximately 2.5 litres (at 25°C and 760 mm Hg) of krypton (99.99 per cent). In order to safely retain this pressure the target vessel is stoutly constructed, the walls being 6 mm thick and water cooled. The beam entry window is either 0.025 mm titanium or 0.025 mm EN58B stainless steel foil. During irradiation the window is cooled by a jet of air directed onto its surface. The vessel is equipped with both a vacuum and a pressure gauge for use during the filling, irradiation and recovery phases of its operation. The target vessel is evacuated to better than 1 mm Hg prior to filling with krypton. Due to the heating effect of the deuteron beam the filling pressure rises to ~ 1.8 kg cm^{-2} (25 lb in^{-2}) when irradiations are carried out at 30–35 μA.

Yields

The yields of $^{85}Kr^{m}$ and the other krypton radionuclides produced

by the deuteron irradiation of krypton are measured after recovery of the target filling, by taking a known small fraction for gamma spectrometric assay. The details of this procedure are described in section 8.3.5. Table 8.2 (*a*) shows the results of four irradiations carried out with a 16 MeV deuteron beam current of 30–35 μA. Table 8.2 (*b*) shows results obtained for samples that have been

TABLE 8.2 (*a*)

YIELDS, EXPRESSED AT END OF BOMBARDMENT (EOB), OF $^{85}Kr^{m}$, ^{87}Kr AND ^{79}Kr OBTAINED IN 16 MeV DEUTERON IRRADIATIONS OF KRYPTON CONTAINED IN A 45 CM DEEP VESSEL FILLED TO A PRESSURE OF 0.7 kg cm^{-2} (10 lb in^{-2}) GAUGE

No.	μA	μAh	*Irradiation time* h	EOB *Yield* mCi μAh^{-1}			$100 \times \frac{^{87}Kr}{^{85}Kr^{m}}$	$100 \times \frac{^{79}Kr}{^{85}Kr^{m}}$
				$^{85}Kr^{m}$	^{87}Kr	^{79}Kr		
1	30	67	2.45	1.76	1.2	5.9×10^{-3}	68	0.34
2	30	142	4.75	1.71	0.95	8.1×10^{-3}	56	0.47
3	33	60	1.83	2.23	1.6	8.9×10^{-3}	72	0.40
4	35	55	1.75	2.05	0.96	7.9×10^{-3}	47	0.39

TABLE 8.2 (*b*)

YIELDS EXPRESSED AT EOB + 14 h OF $^{85}Kr^{m}$, ^{87}Kr, AND ^{79}Kr OBTAINED IN IRRADIATIONS AS DESCRIBED IN TABLE 8.2 (*a*)

No.	μA	μAh	*Irradiation time* h	EOB + 14 h *Yield* mCi μAh^{-1}			$100 \times \frac{^{87}Kr}{^{85}Kr^{m}}$	$100 \times \frac{^{79}Kr}{^{85}Kr^{m}}$
				$^{85}Kr^{m}$	^{87}Kr	^{79}Kr		
1	30	67	2.45	0.203	8.7×10^{-4}	4.5×10^{-3}	0.43	2.2
2	30	142	4.75	0.198	4.5×10^{-4}	6.1×10^{-3}	0.23	3.1
3	33	60	1.83	0.248	7.3×10^{-4}	6.8×10^{-3}	0.29	2.7
4	35	55	1.75	0.237	4.5×10^{-4}	5.5×10^{-3}	0.19	2.3

allowed to decay for 14 h after the end of bombardment (EOB) before measurement. It will be seen that the ^{87}Kr content has fallen to quite low levels whereas the ^{79}Kr level has inevitably risen.

8.3.3 Recovery of Krypton-85m

General Principles

After irradiation and overnight cooling (decay) the target is transferred from the cyclotron to a shielded and ventilated enclosure where the recovery equipment is installed. The krypton may be recovered for final storage at either high or low pressure. The

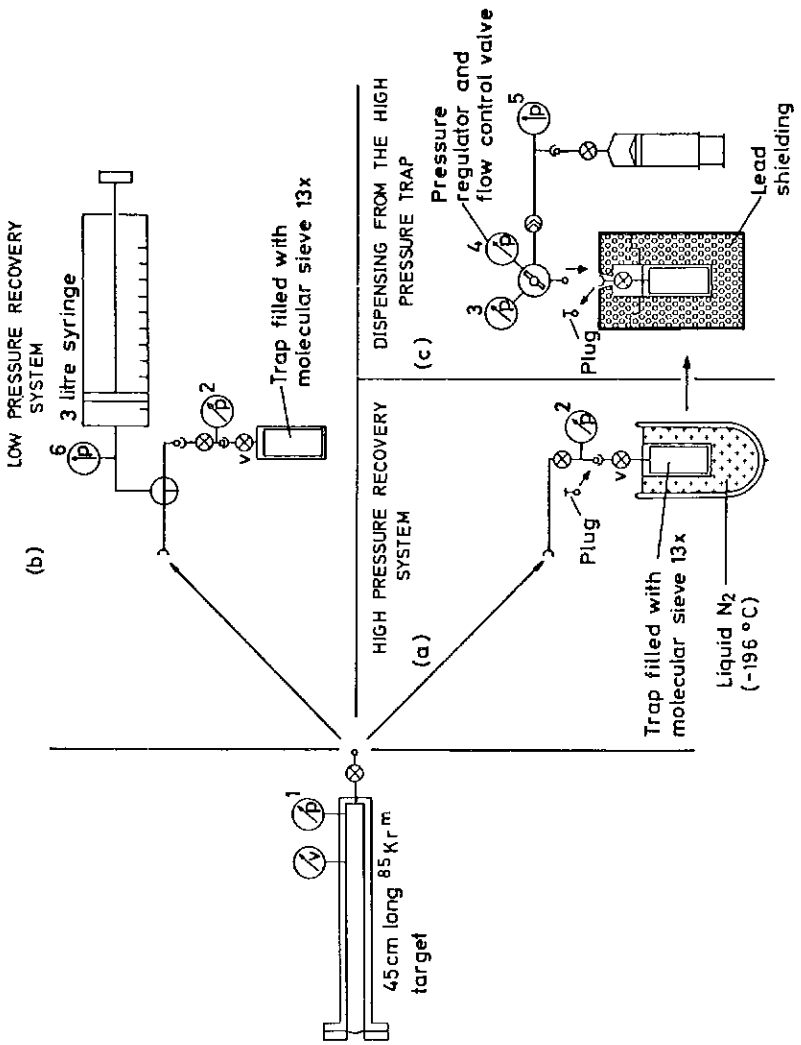

Figure 8.7 Krypton-85m recovery and dispensing systems: (*a*) High pressure recovery system; (*b*) low pressure recovery system; (*c*) dispensing from the high pressure trap

systems, both relying on the cryogenic pumping capability of molecular sieve type 13 x*, are shown schematically in *Figure 8.7* (*a*) and (*b*) respectively.

High Pressure Recovery

In this mode of recovery the product is finally contained in a small volume trap which is readily shielded for transportation. The

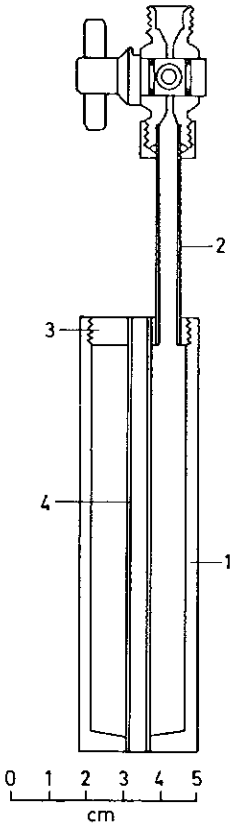

Figure 8.8 High pressure trap for krypton-85m: (1) Stainless steel outer pressure vessel; (2) stainless steel inlet tube and valve (circle seal type 9530T-4CC); (3) screwed and brazed copper plug; (4) copper cooling pipe brazed top and bottom

trap must however be carefully designed and constructed as it must withstand high pressures up to 140 kg cm^{-2} (2000 lb in^{-2}) (see section 3.11.4, page 102). A typical design is shown in *Figure 8.8*. The essential features to note are the heavy walled outer tube, the screwed and brazed end cap and the stainless steel inlet/outlet tube.

* Union Carbide.

The latter material is essential to avoid freezing the seals in the valve whilst the trap is cooled to −196°C with liquid nitrogen. On warming, the pressure of the contents is indicated by the pressure gauge 2 (*Figure 8.7*). For ease of shielding during transport the pressure gauge is removed and the trap isolated by closing valve V and plugging its outlet.

Low Pressure Recovery

The essential components for this method of recovery are a small cryogenic trap as described above, and a large syringe as shown in *Figure 8.7 (b)*. After irradiation the excess pressure in the target may be released directly into the syringe. The remaining krypton is trapped by the cooled molecular sieve to be subsequently released into the syringe on warming. The syringe volume is adjusted until the pressure gauge 6 indicates atmospheric pressure. Thus the recovered volume may be estimated.

8.3.4 Dispensing

Dispensing from the High Pressure Trap

Dispensing may be carried out in a variety of ways depending on the final application in mind. The procedure for dispensing from the high pressure trap is facilitated by the use of a good quality pressure regulator and needle valve as shown schematically in *Figure 8.7 (c)*. Samples can then be taken into syringes of any suitable size for assay and use.

The Calibrated Ionization Chamber

The measurement of dispensed high level radioactive samples is invariably carried out using an ionization chamber of the high pressure type (see section 3.7.3, page 81). This type of ionization chamber has a high sensitivity and may also be used to measure low level calibration sources that are prepared for assay using a Ge/Li gamma spectrometer as described below. Thus a calibration of the ionization chamber response may be achieved in $\mu\mu$A μCi^{-1} for the assayed sample. Now, provided further sources of the assayed radionuclide that are to be measured may be contained within the volume of uniform sensitivity (see *Figures 3.14* and *3.15*), their radioactive content may easily be derived. For larger volume sources, dispensing by volume may be necessary with due attention to the pressure and temperature conditions under which the volumes are measured. Thus, for example, a 20 ml sample would be measured in the ionization chamber as described above and the radioactive

content of a 200 ml sample, at the same temperature and pressure as the 20 ml sample, inferred to be ten times higher. Generally these methods are only applicable if the material is radionuclidically pure.

Dispensing of Samples Containing Radionuclidic Impurities

Samples must sometimes be dispensed that contain radionuclidic impurities. This is often unavoidable. For example, freshly prepared $^{85}Kr^{m}$ contains a large proportion of ^{87}Kr and a significant level of ^{79}Kr (see Table 8.2 (*a*)). Clearly the ionization chamber response in $\mu\mu$A μCi^{-1} for $^{85}Kr^{m}$ in the assayed sample will change with time as the contribution to the ionization current due to ^{87}Kr and ^{79}Kr changes with time. An approach that circumvents this problem is to prepare an assay sample for each batch of material and use it as a reference source throughout the entire dispensing procedure, allowance being made for the decay of $^{85}Kr^{m}$. It is essential therefore to ensure that during the useful life of this assay source no leakage or diffusion from the container occurs. This is easily established in test runs when the sample may be repeatedly assayed using the Ge/Li spectrometer throughout and checking that the resulting values fit the published half-life data.

8.3.5 Quality Control

The Calibrated Gamma Ray Spectrometer

The estimation of the levels of gamma emitting radionuclidic impurities in $^{85}Kr^{m}$ is best carried out using a Ge/Li gamma ray spectrometer calibrated for sensitivity and energy. A typical gamma spectrum for $^{85}Kr^{m}$ obtained at EOB + 14 h is shown in *Figure 8.9*.

Gamma Ray Spectrometer Sensitivity Calibration and Gas Sample Preparation

Sensitivity calibration of a gamma ray spectrometer is conveniently carried out using sources of small physical size (~ 1 ml of liquid) that have been standardized by an absolute counting technique. Calibration curves for photopeak sensitivity (counts s^{-1} μCiγ^{-1}) may be obtained after due allowance for the compton contribution to each photopeak (see below). It is essential, therefore, to use gas samples of as nearly as possible the same geometry. A convenient method of preparing 1 ml gas samples is to fill a 2 ml disposable syringe to 1 ml with the gas (at atmospheric pressure) to be assayed. The syringe is then quickly sealed with a blind luer hub and mounted in a jig so as to reproduce the position of the 1 ml calibration sources.

The counting efficiency falls the further the source is removed from the detector. This makes it possible to measure samples with a wide range of radioactive content and still maintain near optimum counting rates. If the counting rate is too high the data may be distorted and unreliable due to a variety of problems associated

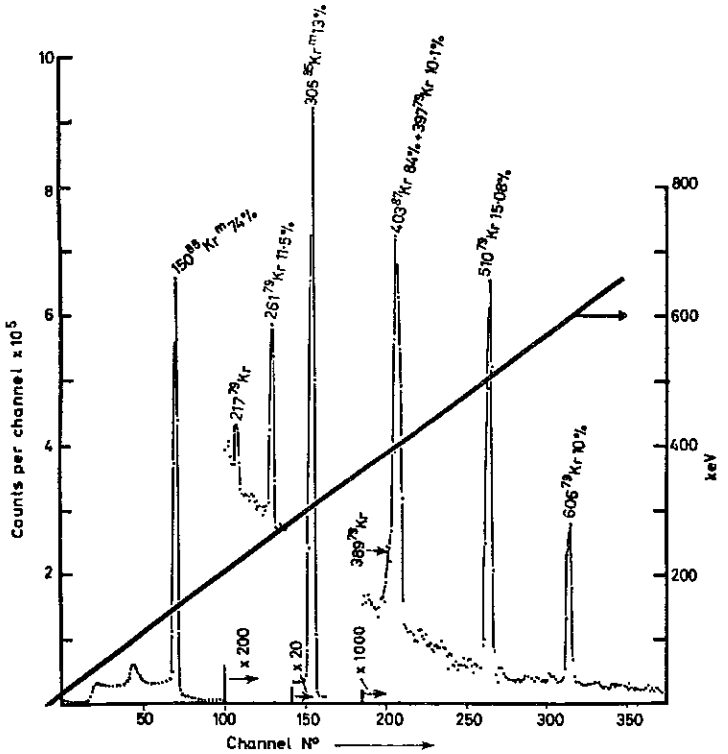

Figure 8.9 Krypton-85m gamma ray spectrum in linear display showing some photopeaks and gamma emission probabilities (P_γ%) due to the radionuclidic impurities krypton-87 and krypton-79 (measurement carried out at EOB+14h). An energy calibration curve (keV *versus* channel No.) is also shown

with the detector, its electronic amplification systems and the multichannel analyser[13]. If the counting rate is too low the measurement becomes unnecessarily tedious and allowance for background contribution more troublesome. The optimum counting rate range is best determined during the sensitivity calibration. *Figure 8.10* shows typical photopeak sensitivity (counts s^{-1} $\mu Ci\gamma^{-1}$) curves obtained for a 15 cc Ge/Li detector. The inserts (*a*) and (*b*) in *Figure 8.10* show

a schematic representation of the geometry of the liquid calibration and gas sources respectively.

Energy Calibration

The energy calibration is readily carried out using a series of sources that emit well-characterized gamma rays[13,28] and noting the channel number of the multichannel analyser (MCA) that corresponds to the maximum accumulated count in the photopeak. A

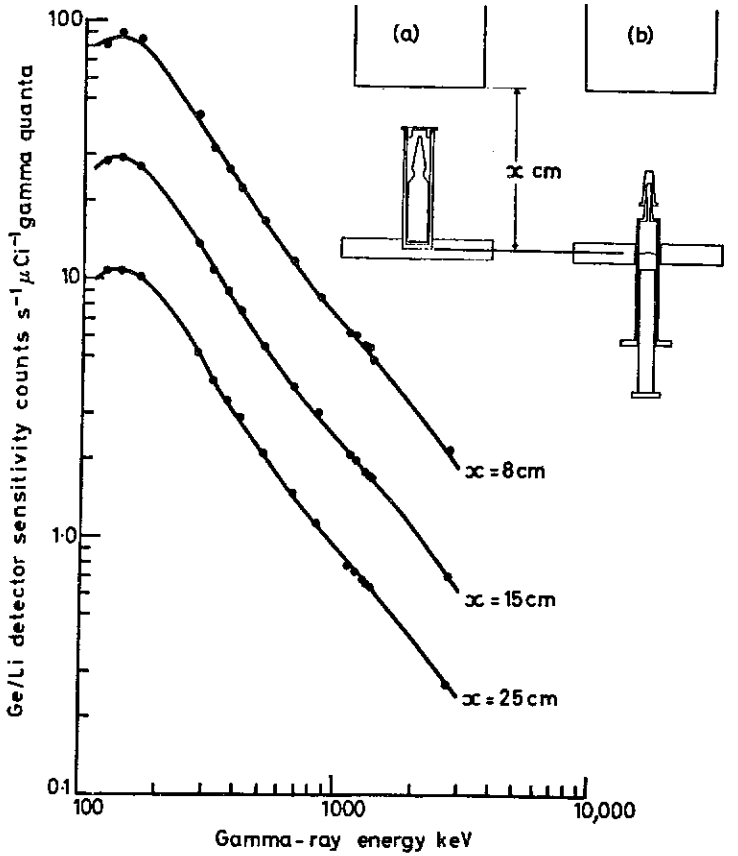

Figure 8.10 Typical sensitivity curves, obtained for a gamma ray spectrometer using a 15cc Ge/Li detector, for source to cryostat distances of 8, 15 and 25 cm (the gamma ray spectra shown in *Figures 8.1, 8.9, 8.11* and *8.13* were obtained with this detector). (*a*) Geometry used for calibration using standardized solution sources of 1 ml volume. (*b*) Geometry used for assaying gas phase samples of 1 ml volume contained in a 2 ml disposable syringe

typical energy calibration curve is shown superimposed on *Figure 8.9*.

Data Acquisition and Processing

Having chosen a geometry for counting the small gas source the clock time is noted and the count started for a preset time. It is common for this preset time to be measured as a live time[13].

At the end of the preset counting time the accumulated data stored in the memory of the MCA may be inspected on the oscilloscope display. The channel numbers of all the photopeaks are located and the corresponding energy values noted with the aid of the energy calibration graph. The photopeaks identified in this way should then be allocated to a nuclide likely to be present in the source. In most cases this can easily be carried out with references to the invaluable compilations of nuclear data[28,37]. In difficult cases it

Figure 8.11 (a) Semi-logarithmic presentation

Figure 8.11 (b) Linear presentation

Figure 8.11 (c) X2 expansion of the section X-Y of *Figure 8.11 (b)* showing the channels l and r selected for the estimation of the 172 keV photopeak accumulated count A.

$$A = N - C \qquad \text{(i)}$$

$$N = \sum_{i=l}^{i=r} a_i \qquad \text{(ii)}$$

$$C = (a_l + a_r) \times \{(r-l)+1\}/2 \qquad \text{(iii)}$$

hence

$$A = \sum_{i=l}^{i=r} a_i - (a_l + a_r) \times \{(r-l)+1\}/2$$

where A = photopeak counts accumulated
N = the sum of the channel contents between channels l and r, and can often be extracted from the multi-channel analyser directly, using an internal integrating processor. A measure of N is also afforded by the use of a single channel analyser with its lower and upper thresholds set at the same levels as the channels l and r respectively
C = Compton contribution to total accumulated counts between channels l and r
a_i = number of counts accumulated in channel i
l = channel number at left-hand limit of photopeak
r = channel number at right-hand limit of photopeak

A parameter of use when estimating $^{81}Kr^{m}$ generator elution efficiencies is the ratio of accumulated photopeak counts to the total accumulated counts between the channels l and r (see section 8.4.7, page 298). This ratio is given by the following expression:

$$\frac{\text{'Photo peak'}}{\text{'Totals'}} = \frac{A}{N} \qquad \text{(iv)}$$

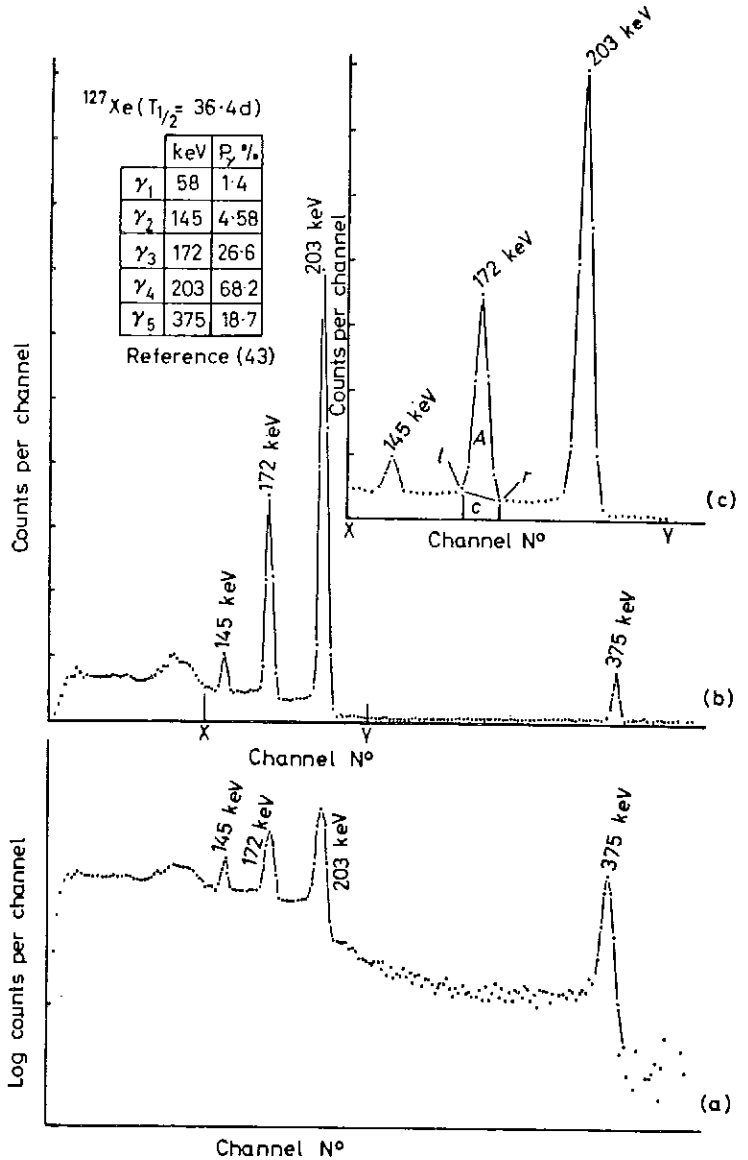

Figure 8.11 (a) (b) (c) Gamma ray spectrum obtained for xenon-127

may be necessary to follow the decay of the photopeak until the half-life of the radionuclide responsible for it may be determined (see section 3.2.3, page 54). In order to determine the radioactive content of the source in microcuries or disintegrations per second it is first necessary to establish the counting rate in selected photopeaks.

A gamma ray spectrum obtained for a source of xenon-127 (see section 8.5) is shown in *Figure 8.11*. The data is presented semi-logarithmically in *Figure 8.11 (a)* and linearly in *Figure 8.11 (b)* for comparison of two possible modes of display. A X2 expansion of the section X–Y of the gamma spectrum shown in *Figure 8.11 (b)* is shown in *Figure 8.11 (c)*; this will be used to describe the method of estimating the photopeak counting rate of the 172 keV peak. It will be seen from *Figure 8.11 (c)* that the 172 keV photopeak sits on the compton continuum due to the combined effects of compton scattering of the 172 keV and higher energy photons. This compton contribution must be estimated in order to arrive at a value for the photopeak counting rate. The estimation should be made using the same method as that used when carrying out the sensitivity calibration. The simplest method is shown schematically in *Figure 8.11 (c)* and may be carried out as follows. Two channels are chosen, one l in the trough before the peak and one r soon after the peak. The contents of these two channels, a_l and a_r, are ascertained together with the sum N of the contents of the channels between channel l and channel r. The number of counts C below the line l to r may be calculated using the expression given in *Figure 8.11*. This value C is then subtracted from the total counts N between channel l and channel r to leave an estimate for the photopeak count accumulated A, i.e. $A = N - C$. This approach is known as the 'total peak area method'[6].

Having established the photopeak counting rate it is readily converted to microcuries of gamma quanta using a typical calibration curve (*Figure 8.10*). To convert this value into microcuries of the radionuclide in question, the probability of gamma emission, at this energy, per disintegration must be ascertained from the various compilations of nuclear data[28,37]. A list of some of the gamma emission probabilities used in assaying some of the radionuclides discussed in this work is appended to the gamma ray spectra shown in *Figure 8.1* for ^{79}Kr, *Figure 8.9* for ^{85}Kr^{m}, ^{87}Kr and ^{79}Kr, *Figure 8.13* for ^{81}Rb/^{81}Kr^{m} and *Figure 8.11* for ^{127}Xe (see Appendix 3).

Chemical Aspects

If the production system described for ^{85}Kr^{m} is operated correctly

there should be no chemical problems. However, it is worth considering what problems may arise in the event of malfunction during any of the stages of a production method. For example, consider the situation if the vacuum pump used for evacuating the target before filling failed to adequately reduce the air content of the target. If this remained undetected an irradiation of an air/krypton mixture may be carried out. The major chemical result of this would be to contaminate the krypton with ozone and oxides of nitrogen, both highly undesirable materials. However, during the course of high pressure recovery, they would be irreversibly adsorbed onto the molecular sieve under the conditions of operation. Release of target gas at low pressure on the other hand, could allow some of these materials to escape removal by the molecular sieve. The detection of such materials is best carried out using standard chemical procedures, for example the Saltzman test for NO_2 (see also section 3.2.3, page 56).

8.4 KRYPTON-81m

8.4.1 Introduction

Parent/Daughter Relationship

Krypton-81 ($T_{\frac{1}{2}} = 2.1 \times 10^5$y) has a metastable state that decays with a 13 s half-life emitting 190 keV photons in 65 per cent of the transitions, the remaining 35 per cent being internally converted. This metastable state is known as krypton-81m (^{81}Kr^{m}) and is populated during the decay of ^{81}Rb ($T_{\frac{1}{2}} = 4.58$ h)[5,46]. ^{81}Rb is commonly known as 'the parent' of 'the daughter' ^{81}Kr^{m}. A simplified decay scheme of this 'parent/daughter' relationship is shown in *Figure 8.12*.

Rubidium-81 Parent Production

Rubidium-81 may be produced by the alpha particle or helium-3 irradiation of bromine by the ^{79}Br(α,2n)^{81}Rb, ^{81}Br(α,4n)^{81}Rb, ^{79}Br(^{3}He,n)^{81}Rb and ^{81}Br(^{3}He,3n)^{81}Rb reactions. Other rubidium nuclides may be produced concurrently including ^{79}Rb($T_{\frac{1}{2}} = 24$ min), ^{82}Rb^{m} ($T_{\frac{1}{2}} = 6.3$ h), ^{84}Rb ($T_{\frac{1}{2}} = 33$ d) and ^{83}Rb ($T_{\frac{1}{2}} = 83$ d).

Radionuclide Generators

Systems that are capable of separating the daughter from the parent are commonly known as radionuclide generators. Generators may be based on chemically separating the two radionuclides or, in

the case of $^{81}Rb/^{81}Kr^m$, the separation can be effected physically. An example of a chemical radionuclide generator is that for separating technecium-99m ($^{99}Tc^m$ $T_{\frac{1}{2}} = 6$ h) from its parent molybdenum-99 (^{99}Mo $T_{\frac{1}{2}} = 67$ h). $^{99}Tc^m$ has found wide applications in medical diagnosis. $^{99}Tc^m$ generators are available commercially.

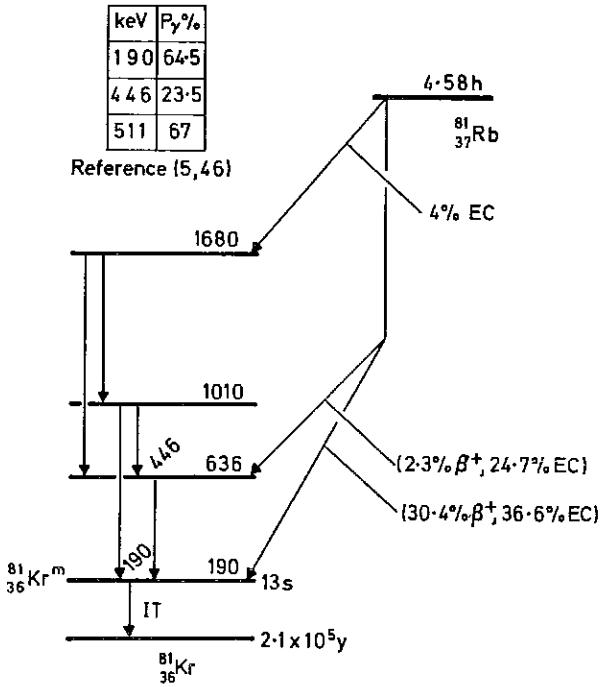

Figure 8.12 Simplified rubidium-81 decay scheme and P_γ list

8.4.2 Krypton-81m Generators

Generator Types

Generators have been developed for the preparation of solution and gas phase samples of $^{81}Kr^m$ for clinical use.

The two types of solution generator described are both based on the principle of the retention of the parent ^{81}Rb on an ion exchange column, the $^{81}Kr^m$ daughter being recovered in solution by the elution of the column with water.

The first type uses a small column 30 mm long and 6 mm in diameter filled with the inorganic ion exchange material zirconium

phosphate which has a high affinity for rubidium under a wide range of conditions[2,34], in particular in the presence of concentrated sodium bromide solutions. Elutions are carried out in ~ 1.5 s using 1–2 ml of water[22]. Elution efficiencies of 65–70 per cent are achieved for low level test generators. A convenient definition of elution efficiency and a method for its estimation, is given in section 8.4.7 (page 297).

The second type of solution generator uses a 60 mm long, 11 mm diameter column filled with the strongly acidic organic ion exchange material AG50 × 4*[50]. Test generator elution efficiencies, as defined in section 8.4.7 of 65–75 per cent have been estimated when elutions have been carried out with 2 ml of water. Both types of generator may also be batch eluted with air to yield gas phase samples of $^{81}Kr^m$ with elution efficiencies approaching 70 and 100 per cent respectively. It is possible to revert to the preparation of solutions after the gas phase elution procedure is complete, but with a reduced elution efficiency in the case of the organic ion exchanger, the efficiency typically falling from 70 to 45 per cent.

Another method of generating gas phase samples is to pass air through a solution containing ^{81}Rb; however, great care must be taken to fully retain any radioactive spray or particulate matter that could possibly escape into the gas phase. A system of spray traps and filters is used to ensure safe operation. The elution efficiency depends on flow rate but may be as high as 75 per cent (see Table 8.3).

Clinical Applications

The clinical application of $^{81}Kr^m$ requires a certain amount of ingenuity. The gamma emission at 190 keV is within the range considered to be ideal for imaging with a scintillation camera. However, in some cases the very short half-life imposes some restrictions. Applications have been sought in the fields of lung ventilation[10,23,50] and perfusion[10,23,50], cerebral blood flow[4] and radiocardiography[23]. A further application that involves the *in vivo* separation of $^{81}Kr^m$ from ^{81}Rb is also a field for research study[24,25]. This approach offers some unique possibilities for blood flow measurements where the diffusible tracer is generated continuously in the organ of interest. By studying the *in vivo* gamma spectrum with a high resolution Ge/Li spectrometer, the reduction in intensity of the $^{81}Kr^m$ 190 keV photopeak when compared with an equilibrium spectrum may be related to the blood flow through the region that is responsible for removing the $^{81}Kr^m$.

* BioRad Laboratories.

8.4.3 Target System for the Production of Rubidium-81

Target Design

In principle any anhydrous water-soluble bromine containing salt may be used as the target material. In practice sodium bromide is a quite satisfactory target material. Either powder or melted type targets may be used. The latter are generally more reliable for high intensity irradiations (40–50 μA, 30 MeV alpha particles) and lend themselves to remote handling techniques. A schematic representation of the target is shown in *Figure 8.2* (*a*).

Target Preparation

The target is prepared by melting ~ 4 g of Optran grade* NaBr into a 0.8 mm deep, 12.5 cm long and 2.5 cm wide grooved recess machined into a 5 cm wide and 18 cm long copper plate 3 mm thick (see *Figure 8.2* (*b*)). Melting of dry NaBr is carried out under H_2 using an eddy current heater to avoid oxidation of the copper.

Irradiation Conditions

The maximum safe operating beam current is very dependent upon the beam power distribution. However, the situation is not as critical as it is when the product is volatile (see sections 8.2.2, page 264 and 8.5.2, page 307) and provided that target material is not lost from the beam strike area a limited amount of melting is not too deleterious.

Yields

The yield of ^{81}Rb may be estimated by assaying a fraction of the dissolved target material by gamma ray spectrometry. A typical gamma ray spectrum of ^{81}Rb is shown in *Figure 8.13*. For irradiations with 30 MeV alpha particles, yields of 2 mCi μAh^{-1} may be obtained with both powder and melted targets using the ^{79}Br(α,2n)^{81}Rb reaction. A yield of 2.9 mCi μAh^{-1} has been reported for irradiations of NaBr with 50 MeV alpha particles, the target being designed to reduce the alpha particle energy to only 30 MeV to minimize impurities (see below)[50]. The ^{81}Rb production rate when NaBr is irradiated with 22 MeV ^{3}He particles is reported to be 0.012 mCi μAh^{-1}[47].

Rubidium Radionuclidic Impurities

In all the above production methods for ^{81}Rb other rubidium

* Supplied by British Drug Houses Chemicals Ltd, Poole, Dorset BH12 4NN, England.

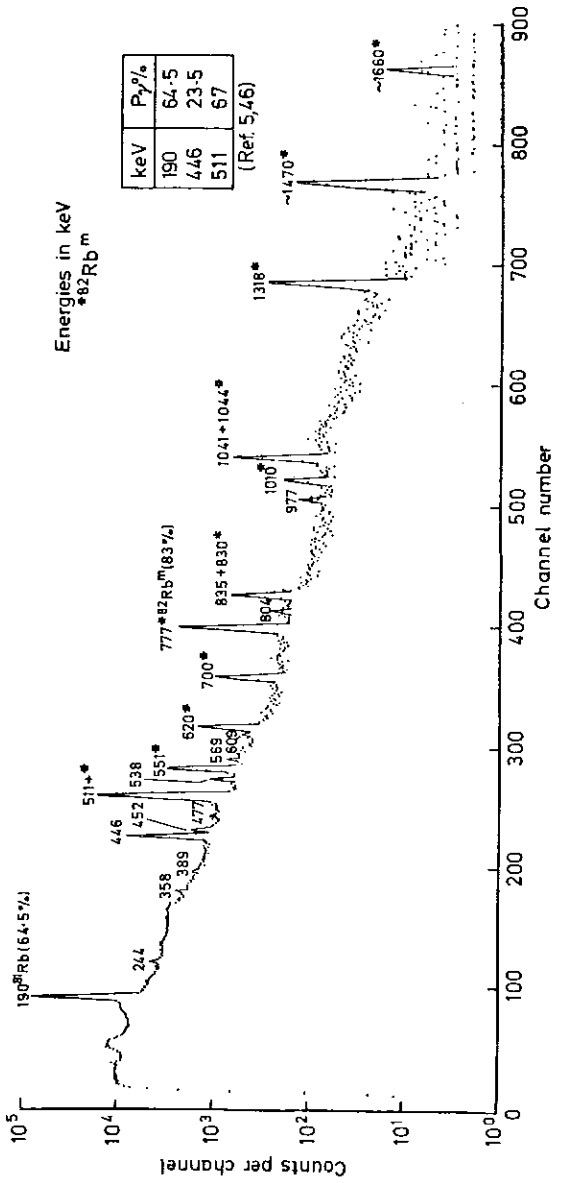

Figure 8.13 Gamma ray spectrum obtained for ^{81}Rb

radionuclides are produced. These are of importance for three reasons. Firstly, other rubidium radionuclides may be produced that also have radioactive krypton daughters, for example ^{79}Rb ($T_{\frac{1}{2}}$ = 24 min)/^{79}Kr ($T_{\frac{1}{2}}$ = 35 h) and ^{83}Rb ($T_{\frac{1}{2}}$ = 83 d)/^{83}Kr^{m} ($T_{\frac{1}{2}}$ = 1.9 h). These daughters could potentially cause impurities in ^{81}Kr^{m} samples. Fortunately these impurities are readily reduced to low levels during the preparation of the generator[50]. Secondly, all solution generators have a finite parent leakage, that is, a small fraction of the Rb is eluted from the generator together with the ^{81}Kr^{m}. Other rubidium nuclides will also leak to the same extent as ^{81}Rb and will contribute to the radiation dose for any procedure involving the use of ^{81}Kr^{m} solutions.

Finally, all rubidium radionuclides other than ^{81}Rb will increase the problem of shielding the processing equipment and generator systems. It is desirable to ensure that the generator is safely transportable and may be used close to the site of clinical use without affecting the detecting systems. To achieve this extensive lead shielding is necessary.

8.4.4 Recovery of Rubidium-81

Target Dissolution and Generator Loading System

After irradiation the target is transferred remotely from the cyclotron vault to a 10 cm thick lead shielded hot cell, where the equipment shown schematically in *Figure 8.14* is set up. A target dissolver is used to dissolve the melted NaBr from its copper backing using ~ 10 ml of water, as described in detail in section 8.2.3 (page 266). The resulting solution is then transferred in whole or in part to the gas or solution generator systems as required (see sections 8.4.5 and 8.4.8, page 299).

8.4.5 Krypton-81m Solution Generators

Generator Design

The important design features of the solution generator are the dimensions of the ion exchange column and its outlet connections.

The volume of the ion exchange material supported in the column should be adequate to afford efficient recovery of ^{81}Rb from the sodium bromide target solution and acceptable ^{81}Rb leakage values on elution. If the volume is excessively large, elution efficiencies will suffer, as large volumes of eluant will have to be used with inevitably longer elution times. Columns of 30 mm or 22 mm long and 6 mm diameter as shown in *Figure 8.15* (*a*) and (*b*) have been used satis-

factorily when filled with zirconium phosphate. Columns of organic ion exchanger 60 mm long and 11 mm diameter perform well on elution but are subject to severe loading restrictions (see page 295).

The dead volume at the outlet of the column together with the terminal sterilizing filter should also be minimized to maintain maximum radioactive concentrations. The Millipore Millex disposable filter is of particular value in this respect.

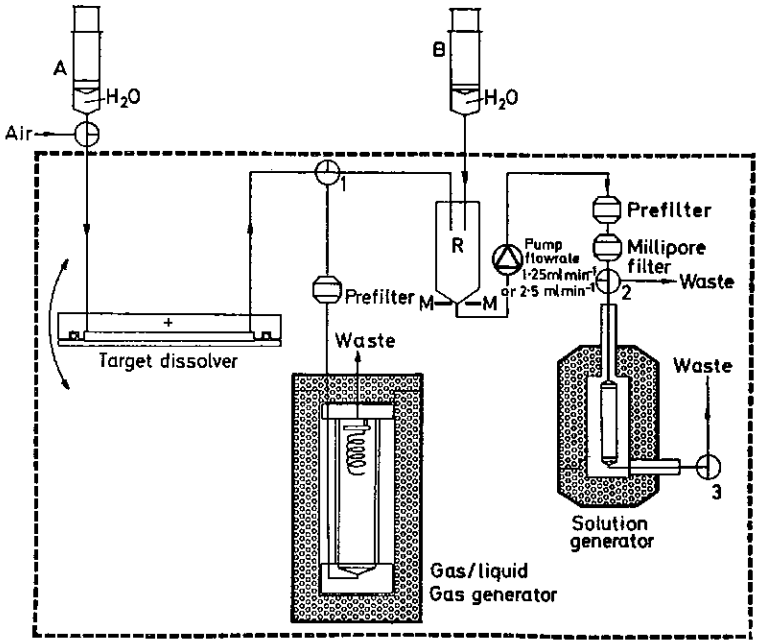

Figure 8.14 Recovery system for rubidium-81 and krypton-81m generator loading systems

The external form of the generator is largely determined by the type of shielding envisaged. Two possible configurations are shown in *Figure 8.15* (*a*) and (*b*), the latter being particularly well shielded and suitable for transportation. The silicone rubber septa provide a seal for transport and may be pierced by hypodermic needle fittings for generator loading and subsequent ^{81}Kr^{m} elution, the generator remaining in its lead shield during both operations.

Generator Construction

The ion exchange column is best fabricated in transparent material to aid visual control of its filling with ion exchanger. Perspex is a

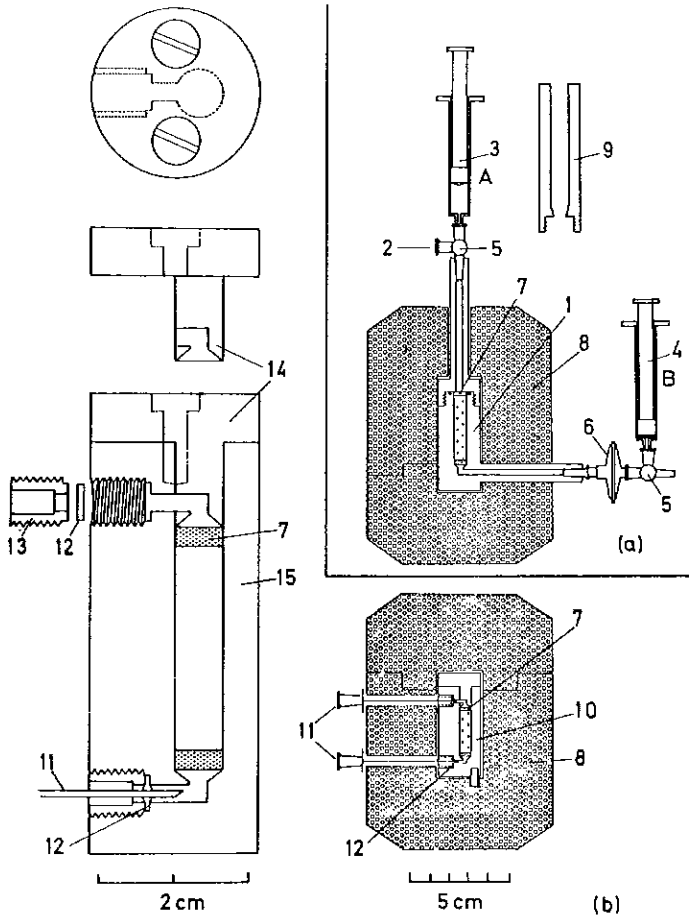

Figure 8.15 (*a*) and (*b*) Krypton-81m solution generators

Figure 8.15 (*a*) Simple solution generator mounted in its primary lead shield: (1) Generator column 30 mm long × 6 mm diameter filled with zirconium phosphate; (2) water for injection inlet from sterile reservoir; (3) eluant input syringe A 2 ml capacity; (4) eluate collection syringe B 2 ml capacity; (5) two-way taps (Pharmaseal type K75, see *Table 3.6*); (6) Millipore 'Millex' sterilizing filter; (7) sintered polyethylene column packing retainers; (8) primary lead shield; (9) filling reservoir

Figure 8.15 (*b*) Transportable krypton-81 m solution generator shown with loading/elution hypodermic needles in position: (10) generator column 22 mm long × 6 mm diameter filled with zirconium phosphate; (11) hypodermic needles fitted with hilts and sharpened for septum penetration*; (12) silicone rubber septa; (13) septum retaining plug ($\frac{1}{4}$", 28 TPI, UNF 'Cheminert' compatible); (14) PTFE top cap secured with two nylon screws; (15) generator column body machined in perspex

* The other input/output components of the transportable generator are effectively as shown in *Figure 8.15* (*a*).

suitable material as it is readily machined, resistant to the chemical reagents encountered during generator preparation and is mechanically quite robust. The assembly should be made pressure resistant as high pressures of ~ 3 kg cm^{-2} (~ 40 lb in^{-2}) are imposed during the rapid elution procedure.

Sintered polyethylene (2.5 mm thick)* is a suitable material for retaining the column packing material at the top and bottom. The size of disc should be chosen to give a tight push fit which is essential to avoid loss of column packing during all phases of generator operation.

Generator Refinements

It may be desirable to include certain refinements in the generator design. For example, power elution may be required if continuous infusions are envisaged. In these circumstances it is essential to render the infusate isotonic, and this is best achieved by mixing the column effluent on flow with a calculated proportion of a hypertonic solution, for example 2 per cent NaCl solution. Syringe pumps have been used[50] and are probably more reliable than an alternative, the peristaltic pump. Whichever type of pumping system is used, if it incorporates electrical devices the utmost care should be exercised to ensure that the safety code for electro-medical apparatus is adhered to[42].

Generator Preparation and Loading

As there are major differences in the procedures for preparing and loading the two types of solution generator, namely the zirconium phosphate and the organic systems, they will be dealt with separately.

Preparation of the Zirconium Phosphate Generator

Before assembling the generator components they should be thoroughly cleansed using a medically approved cleaning agent, for example Pyroneg,† followed by an exhaustive wash in water for injection. In order to achieve the high rubidium extraction efficiency, typically 99 per cent for a solution containing ~ 2 g NaBr in 10 ml of water, it is essential to ensure that the generator ion exchange column and connecting tubes are free from air bubbles otherwise channelling will occur. As will be seen from the procedure to be described, a major part of the effort is aimed at achieving this. A description of the assembly and loading of the generator shown in *Figure 8.15* (*a*) will be given to convey the general principles involved.

* Supplied by Fisons Scientific Apparatus, Loughborough, Leicestershire, England.

† Diversy Ltd, Cockfosters House, Cockfosters Road, Barnet, Herts, England.

The assembly procedure is as follows using water for injection throughout:

(*a*) The bottom polyethylene sinter is pressed home and the air in it and the column is displaced by forcing water into the output connector.

(*b*) The filling reservoir is fitted and filled with water. A slurry of zirconium phosphate (100–200 mesh)* is then transferred to the reservoir and liquid allowed to flow from the column outlet. During this phase the zirconium phosphate settles to fill the column. When the column bed is full the contents of the reservoir including the excess zirconium phosphate are removed using a pasteur pipette.

(*c*) The reservoir is removed taking care not to disturb the top of the column packing, and the top polyethylene sinter is pressed home on top of the zirconium phosphate. The top connector is installed and water is again forced into the outlet, this time to displace the air in the top sinter and top connector.

(*d*) The generator should now be free from entrained air and should be conditioned by washing first with 20 ml of 3 N HCl and then with water for injection until the pH of the effluent falls to pH 4. The generator is now ready for loading.

(Note: When not in use all equipment through which fluids flow during generator preparation should be cleaned, dried and suitably stored to avoid bacterial contamination (see also section 8.4.6, page 296).)

Zirconium Phosphate Generator Loading

The generator, prepared as described above, is mounted in its lead shield and installed in the hot cell to be connected to the recovery system as shown in *Figure 8.14*. A glass fibre pre-filter is included before the Millipore filter to retain any particulate matter originating in the target solution that could possibly overload the Millipore filter. A receiver is placed at the outlet of the generator to receive the waste NaBr solution. Water for injection is introduced into the reservoir R and the pump primed. The Millipore filter is temporarily disconnected from the two-way tap 2 and inverted until all the air is displaced and water issues. The pump is stopped and the Millipore filter carefully re-connected to the tap 2. This procedure is to ensure that no air bubbles enter the generator. The excess water in the reservoir R is now discharged to waste through the generator until the level falls to the mark M-M. This serves as a final system check before the target is brought into the hot cell.

* BioRad Laboratories. However, material prepared in the laboratory[15] invariably returns better values of elution efficiency (see Appendix 6).

The NaBr is dissolved in 10 ml of water for injection as described in section 8.2.3 (page 266). The NaBr + ^{81}Rb is then transferred to the receiver R from the tilted target dissolver by applying air pressure using the syringe A. The pump is now operated at a flow rate of 1.25 ml min^{-1}, to transfer the ^{81}Rb onto the generator until again the liquid level falls to the mark M-M. The target dissolver is rinsed with a further 10 ml of water for injection and the above procedure repeated. Finally water for injection is introduced into the receiver R from the syringe B and pumped, at 2.5 ml min^{-1}, onto the column in batches of 10 ml until bromide cannot be detected in the generator effluent. In order to test for bromide, 5 ml of effluent is collected and mixed with $AgNO_3$ and HNO_3 solutions. If bromide is present the resulting solution will go milky as AgBr is precipitated. This test may typically become negative after 40 ml of washing, in which case a further 40 ml wash should then be carried out. Typically 80 ml of washing will reduce a sodium bromide concentration of 250 mg ml^{-1} to a level of 5 μg ml^{-1}. It is valuable to carry out a dummy preparation using unirradiated NaBr together with some tracer ^{82}Br, fractions being collected at the generator output. The ^{82}Br content in each fraction is readily converted to a NaBr content per fraction *versus* wash volume as shown in *Figure 8.16*.

When the washing procedure is complete the generator is sealed by closing the taps 2 and 3 and removed from the hot cell for final testing.

Preparation of the Organic Ion Exchanger Filled Generator

Before assembling the generator components they should be thoroughly cleansed using a medically approved cleaning agent, for example Pyroneg,* followed by an exhaustive wash in water for injection.

In order to achieve as high a rubidium extraction efficiency as possible (see generator loading below), it is essential to ensure that the generator ion exchange column and its connecting tubes are free from air bubbles. A recommended procedure to achieve this is described, for the generator shown in *Figure 8.15* (*a*), but the principles and practices are relevant to any closed column system. The assembly procedure, using water for injection throughout, is as follows:

(*a*) The bottom polyethylene sinter is pressed home and the air in it and the column displaced by forcing water into the output connector.

* Diversy Ltd, Cockfosters House, Cockfosters Road, Barnet, Herts, England.

(*b*) The filling reservoir is fitted and filled with water. A slurry of the H^+ form of the ion exchange resin type AG50 × 4* is then transferred to the reservoir and liquid allowed to flow from the column outlet. During this phase the ion exchanger settles to fill the column volume. When the column is full the outflow is stopped and any excess ion exchanger is removed together with the water from the reservoir using a pasteur pipette.

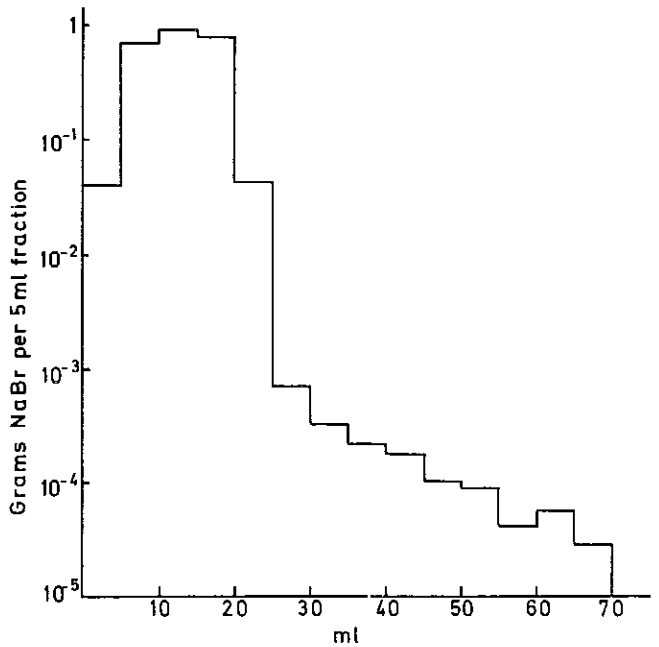

Figure 8.16 Krypton-81m solution generator–sodium bromide elution curve following the loading of 2.5 g of NaBr labelled with ^{82}Br

(*c*) The reservoir may now be removed, the top sinter pressed home carefully on top of the column packing and the top connector installed. Water is again forced into the outlet, this time to displace the air in the top sinter and top connector. The generator should now be thoroughly flushed with 50 ml of water to remove trace organic impurities that usually occur in resin and often cause the initial washings to be pink in colour.

* BioRad Laboratories, 32nd and Griffin Ave, Richmond, California 94804, U.S.A.

Organic Ion Exchanger Generator Loading

The high affinity of AG50 × 4 for rubidium may only be realized if very dilute solutions of sodium bromide (< 0.5 per cent)[50] are applied to the column at flow rates as low as 0.6 ml min^{-1}. These factors impose severe restrictions on the loading procedure which must inevitably end in a compromise.

For example, consider a target containing 2 g of sodium bromide. In order to achieve a 0.5 per cent solution, this must be dissolved in 400 ml of water. Two factors must now be balanced; firstly, the flow rate during NaBr solution loading (which will largely determine the delay between the end of bombardment and the time of potential use of the generator), and secondly the rubidium recovery efficiency. Unfortunately at high flow rates (~ 2.5 ml min^{-1}) the recovery efficiency may be as low as ~ 40 per cent uncorrected for decay. Thus with a loading time of 160 min (400 ml at 2.5 ml min^{-1}) a further decay factor of ~ 0.67 must be applied which leads to an overall loading efficiency of ~ 27 per cent without any allowance for the extra delay necessary to free the generator of NaBr. Thus a compromise may be necessary depending upon local conditions such as the ^{81}Rb yield available and the time available between irradiation and use. This problem can be largely circumvented if the alternative ion exchange material zirconium phosphate is used. Here, loading efficiencies of 99 per cent may be achieved in 40 min including final washing, leading to an overall loading efficiency of 89 per cent after allowing for decay during loading.

The equipment for loading the organic ion exchanger generator is similar to that described for the zirconium phosphate generator.

The main difference is that the reservoir R must be capable of holding a volume compatible with the need to prepare a 0.5 per cent NaBr solution from the target material.

8.4.6 Krypton-81m Solution Generator Testing

Prior to release for clinical use, four types of test should be carried out on the generator and its associated systems. These are for the eluted $^{81}Kr^m$ activity, parent breakthrough or leakage, estimation of trace chemical impurities in the eluate, and biological tests on the whole system.

Test for Eluted $^{81}Kr^m$ Activity

The generator is set up ready for clinical use as shown in *Figure 8.15* (*a*). Several test elutions are then carried out as follows:

Syringe A is filled to the required volume (not less than 2 ml) from the water for injection reservoir. This water is then passed

through the generator in ~ 1.5 s and recovered in syringe B. A timer is started at the end of elution, the syringe B removed, sealed with a luer blind hub and quickly transferred to a jig which is part of a calibrated counter system. The decay of the sample is recorded for 60-100 s using a multiscaler or digital rate meter. The count rate at a known reference time after the end of the elution is noted and the eluted activity at the end of elution estimated. A calibrated ionization chamber may also be used for this test but it is essential that the time constant of the electronics system is short enough to properly monitor the rapid decay of $^{81}Kr^{m}$ (see section 3.7.4, page 84).

After several such elutions the standard of performance of the generator will be apparent. If satisfactory, the next test may be carried out. A method of elution efficiency estimation is described in section 8.4.7.

^{81}Rb Leakage and Other Radionuclidic Testing

The eluates from the above test are combined after the $^{81}Kr^{m}$ has decayed, in order to estimate the ^{81}Rb leakage. The ^{81}Rb is assayed using a calibrated gamma spectrometer. The ^{81}Rb content is then expressed as a percentage of the total $^{81}Kr^{m}$ originally present in the samples at the end of elution. The value obtained should be the order of 4×10^{-4} per cent. During the assay of leaked ^{81}Rb a large photopeak is often observed at 511 keV in excess of that expected due to rubidium nuclides. By decay analysis this peak has been assigned to ^{18}F. It is presumably produced by the $^{16}O(\alpha,pn)^{18}F$ reaction on trace water in the sodium bromide target. Leakage of ^{18}F from the generator is the order of 1×10^{-3} per cent.

If elutions are carried out with isotonic saline (0.9 per cent NaCl solution) both ^{81}Rb and ^{18}F leakage values are increased by at least an order of magnitude; also ^{24}Na and ^{22}Na become detectable in the eluate. Hence saline elutions should not be used clinically without careful consideration. A saline infusion system is described in section 8.4.5 (page 291).

Eluate Chemical Purity Tests

The three elements that are most likely to be present in the eluates in the event of generator malfunction are copper, from the target plate, zirconium, from the column packing, and bromide, from the target material. All three elements may be determined spectrophotometrically using standard analytical procedures.

Biological Tests

The sterility of the eluates is ensured by the use of a terminal

Millipore filter, sterile disposable syringes and good handling practice. Freedom from pyrogenic material is best ensured by adopting a standard preparative procedure throughout, with pyrogen testing of random eluate samples from a typical test run. Subsequent generators should be tested occasionally.

The whole procedure should be vetted by a responsible pharmacist to ensure that no problems either long or short term are likely to occur.

8.4.7 Krypton-81m Solution Generator Efficiency Estimation

Efficiency Definition

There may be occasions when the elution efficiency of the solution generator must be estimated. For example, new batches of zirconium phosphate should be tested on a pilot scale before embarking on a large-scale production run. Before describing a method for this estimation, a definition of elution efficiency is necessary:

$$\%\ \text{elution efficiency} = \frac{\text{Daughter removed} \times 100}{\text{Daughter available at radioactive equilibrium}}$$

As the half-life of $^{81}Kr^{m}$ is so short it is important to state the time at which the daughter was removed. In the method of elution efficiency estimation to be described, the reference time for removed daughter will be the time of end of elution.

Method of Estimation

The estimation is carried out by gamma ray spectrometry. The equilibrium $^{81}Kr^{m}$ content of the generator is measured and compared with the $^{81}Kr^{m}$ content at the end of elution.

Data Acquisition and Processing

The gamma spectrum of the generator at radioactive equilibrium is recorded and the 190 keV photopeak located. The count rates due to the photopeak and compton contribution are then estimated as described in section 8.3.5 (page 280). Thus the equilibrium counting rate due to $^{81}Kr^{m}$ is established. A single channel analyser (sometimes incorporated in the multichannel analyser) is adjusted to accept the same upper and lower energy limits as chosen for the 190 keV peak estimation. The output of this single channel analyser is then fed into the multiscaler input of the multichannel analyser. The multiscaler is then started at a channel stepping rate of one channel per second and equilibrium data is acquired. The generator is then eluted with the desired eluant volume at a chosen rate. At

the end of elution the eluate containing $^{81}Kr^{m}$ is collected in a well-shielded syringe. The $^{81}Kr^{m}$ is then allowed to grow in again for 40–60 s, the elution procedure then being repeated. Several such

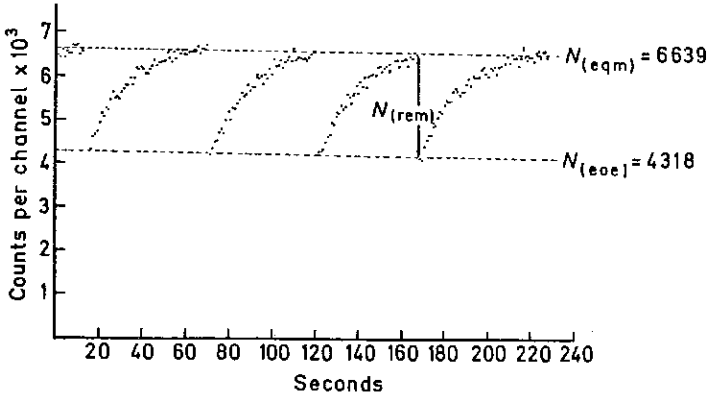

Figure 8.17 (a) Elution efficiency estimation for a krypton-81 m solution generator* eluted 4 times with 2 ml of water. Elution time 1.5 s.

At equilibrium:

$$\frac{\text{Photopeak counting rate due to } ^{81}Kr^{m}}{\text{Total counting rate in energy band selected}} = 0.506$$

This value being obtained for the NaI(Tl) gamma ray spectrometer used to acquire the data shown in *Figure 8.17 (a)* by the method shown in *Figure 8.11 (c)*, equation (iv).

$$\text{Elution efficiency} = \frac{\text{daughter } (^{81}Kr^{m}) \text{ removed}}{\text{daughter } (^{81}Kr^{m}) \text{ available at radioactive equilibrium}} \times 100\%$$

$$= \frac{N_{(rem)}}{N_{(eqm)} \times 0.506}$$

Where

$N_{(rem)}$ is the change in counting rate as the elution is carried out ($N_{(rem)} = N_{(eqm)} - N_{(eoe)}$).

$N_{(eqm)}$ is the mean equilibrium counting rate in the energy band selected.

$N_{(eoe)}$ is the mean counting rate at end of elution.

Using experimental values obtained for $N_{(eqm)}$ and $N_{(eoe)}$ we have

$$\text{Elution efficiency} = \frac{(6639-4318)}{6639 \times 0.506} \times 100\%$$

$$= 69\%$$

* Data shown for a 22 mm × 6 mm column of zirconium phosphate

elutions may be carried out if sufficient data space is available in the multiscaler. The stored data may be finally inspected and printed out. A series of steps in the counting rate should be apparent

corresponding with the time of each elution. Each step should be followed by a rapid recovery in the counting rate, this reaching its former level within the inter-elution period of 40–60 s. A typical display of the resulting data obtained using a NaI (Tl) spectrometer is shown in *Figure 8.17 (a)* together with a typical calculation. Also shown (in *Figure 8.17 (b)*) is a typical elution curve obtained by allowing the generator effluent to flow through a small volume (~ 0.05 ml) spiral mounted in a well-type scintillation counter, the resulting counting rate being recorded on the multiscaler at a channel stepping rate of 200 channels per second. The total elution volume was 2 ml.

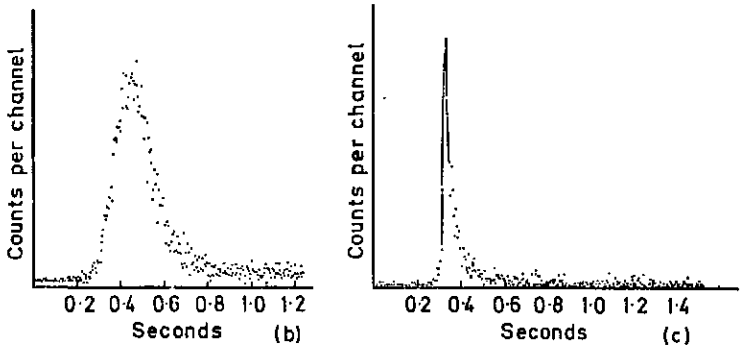

Figure 8.17 (b) Elution curve for a krypton-81 m solution generator.* 2 ml elution carried out in 1.5 s; typical elution efficiency 70 per cent

Figure 8.17 (c) Elution curve for a krypton-81 m ion exchange gas generator.* 10 ml air elution carried out in 1.5 s; typical elution efficiency 70 per cent

* Data shown for a 22 mm × 6 mm column of zirconium phosphate

8.4.8 Krypton-81m Gas Generators

General Principles

The principles of two generators were briefly mentioned in section 8.4.2 (page 284). The ion exchange column gas generator is the most versatile and has a high batch elution efficiency. It requires no traps or filters, as the parent ^{81}Rb is strongly bound to the ion exchange material. The gas/liquid bubbling system on the other hand requires an elaborate system of traps and filters to ensure that no parent escapes into the dispensing system. Here a trap filled with zirconium phosphate ion exchanger effectively guards against the escape of rubidium radionuclides allowing only $^{81}Kr^{m}$ to pass. Its preparation

is both simple and rapid. It may be eluted continuously over an extended period with little or no reduction in elution efficiency.

Ion Exchange Gas Generators

These generators are of the same design as the solution generators described in section 8.4.5, are prepared in the same way, and may be used interchangeably for both applications with some success, particularly if batch gas phase elutions are performed. A typical elution curve for a zirconium phosphate generator is shown in *Figure 8.17* (*c*). The column dimensions are 22 mm × 6 mm as shown in *Figure 8.15* (*b*), the 10 ml elution being carried out in 1.5 s. It will be seen that small elution volumes may be used if care is taken to minimize the dead volume after the generator outlet. The ion exchange gas generator may also be used for continuous elution for limited periods, the elution efficiency falling gradually, seemingly as the ion exchange material dries out. It may be possible to obviate this effect by using a sweep gas that is saturated with water vapour. The zirconium phosphate generator elution efficiency is 65–70 per cent for both batch-wise gas and solution preparations. The organic ion exchanger generator however usually suffers a reduction in elution efficiency for solutions after batch-wise gas elutions. This efficiency may fall from 70 to 45 per cent after the gas eluting procedure. The gas elution efficiency invariably returns to its usual value of 95–100 per cent after solution preparation.

The method used for estimating the elution efficiencies and obtaining elution curves of these generators is the same as that described for solution generators in section 8.4.7.

Gas Generator Using Gas/Liquid Mixing

The design of a generator based on the principle of gas/liquid mixing is shown in *Figure 8.18*. It is loaded with sodium bromide target solution containing ^{81}Rb directly from the target dissolver as shown schematically in *Figure 8.14*.

The sweep gas enters the NaBr solution containing ^{81}Rb through a 3 cm diameter sintered glass disc (porosity 3) when efficient gas/liquid mixing takes place and a large proportion of the ^{81}Kr^{m} is swept out in the gas phase. The effluent gas is carefully freed from NaBr solution spray and radioactive particulates by means of a system of traps and a filter, all of minimum volume to avoid excessive losses due to decay in transit.

The generator must be constructed in such a way as to make it safe to operate at elevated pressures of up to 3 kg cm^{-2} (43 lb in^{-2}). These

pressures are often necessary to enable the transport of the ^{81}Kr^{m} along small tubes (1.5 mm bore) to be achieved rapidly with minimum losses due to decay. The top and bottom of the generator

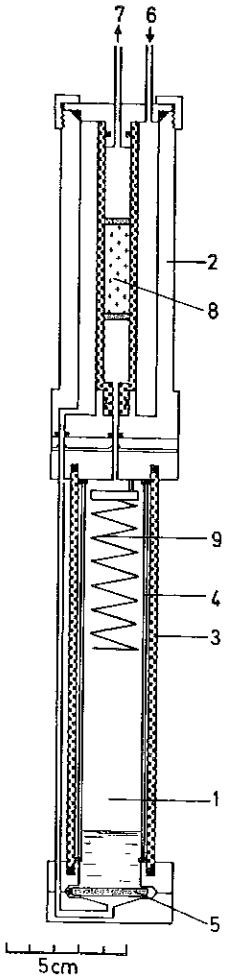

Figure 8.18 Krypton-81 m gas phase generator—gas/liquid type: (1) Gas/liquid mixing chamber; (2) spray trap system; (3) Perspex outer tube; (4) glass liner; (5) 3 cm diameter porosity 3 glass sinter; (6) sweep gas input; (7) generator system output; (8) 50–100 mesh zirconium phosphate rubidium spray trap; (9) polyethylene covered wire spiral antifoam trap

are made from stainless steel or brass. The lower section is split and retains the glass sinter. The three components are sealed together by the use of an 'O' ring. For maximum durability the outer tube of the gas/liquid mixing section is made of heavy wall acrylic (Perspex) tubing. A glass liner mounted within the Perspex provides

a surface that is easily wetted and hence allows the efficient return of NaBr solution that has been carried upwards as spray. The polyethylene covered wire spiral serves as an antifoam trap by breaking down any foam at the centre causing it to fall back to the walls instead of tending to escape from the generator.

Spray Traps and Filter

The two spray traps are shown in *Figure 8.18*, one on the input and one on the output of the generator; for convenience of shielding they are combined coaxially. The input trap should have a volume well in excess of the NaBr solution volume so that in the unlikely event of a sweep gas failure any back pressure in the output flow system could only displace the NaBr solution into this trap. The output trap should be of minimum volume consistent with its demonstrated ability to contain any rubidium radionuclides likely to reach this region under all operating conditions. The small column of coarse (50–100 mesh) zirconium phosphate amply assures this. Finally, the filter on the output should be a high performance type with the minimum dead volume to minimize decay of the $^{81}Kr^{m}$ in transit. A disc of Whatman GF/C glass filter paper supported on a polyethylene sinter 5 cm diameter has been found to be quite satisfactory in these respects. The design of this filter is shown in *Figure 3.4*.

Generator Gas Flow Systems

The generator gas flow system is similar in many respects to other systems described in this book; the basic difference is that the target and cyclotron are replaced by the generator.

A rather specialized gas flow system is shown in *Figure 8.19*. This was designed for the administration of $^{81}Kr^{m}$ to infants during cerebral blood flow investigations[4].

The mixture in the gas cylinder was chosen for each infant according to his requirements. From the regulator and flow control valve the gas was directed to a two-way change over valve. This was fitted with a needle valve as a dummy impedance that could be adjusted to match the impedance of the generator/filter system. Thus it was possible to carry out setting up procedures in the absence of $^{81}Kr^{m}$.

The generator, traps and filter were shielded and located 10 m from the infant in an adjacent room. The output of the generator was passed through a ~ 10 ml spiral placed in a calibrated re-entrant high pressure ionization chamber, affording a constant indication of the administered radioactive concentration. A flowmeter preceded

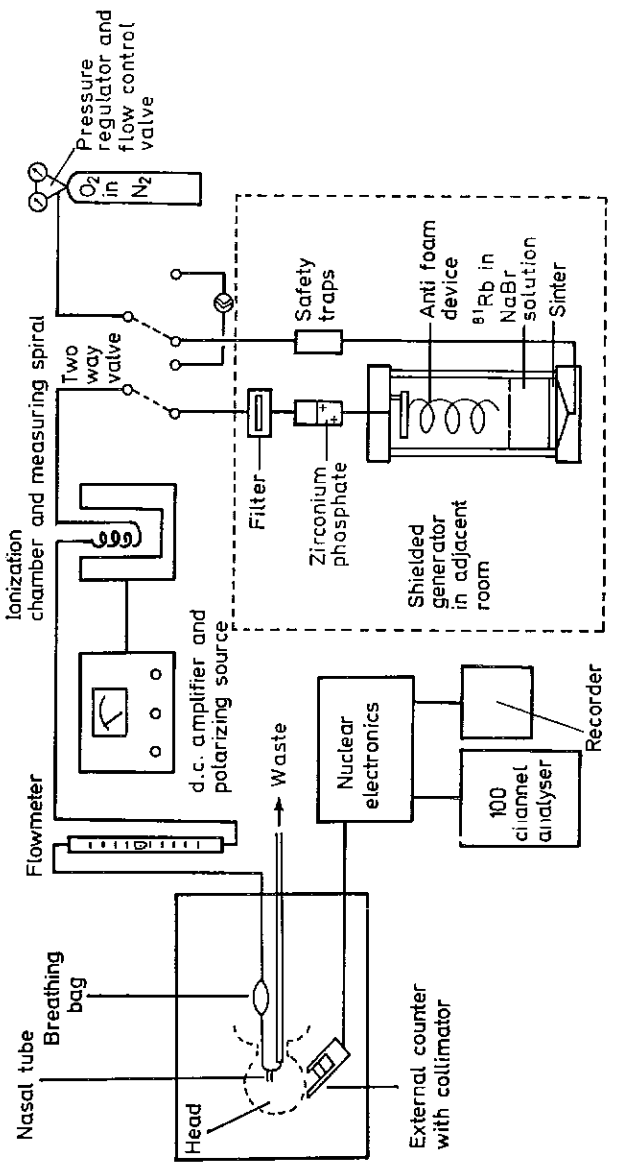

Figure 8.19 Continuous gas phase administration of krypton-81m to infants (schematic layout of generator system, clinical facility and nucleonic monitoring system)

the small rubber breathing bag, the latter enabling the clinician to clearly observe the respiration pattern of the infant.

Performance of Gas Generator Using Gas/Liquid Mixing

The elution efficiency of this gas generator system may be estimated using a similar method to that described for solution generators in section 8.4.7 (page 297). However, in the case of this type of gas generator, steady state measurements may be carried out during periods of continuous elution at specified gas flow rates. The residual $^{81}Kr^m$ in the ^{81}Rb solution is compared with the total available in the absence of gas flow. The gas space above the solution

TABLE 8.3

$^{81}Kr^m$ GAS GENERATOR USING GAS/LIQUID MIXING: FRACTION OF $^{81}Kr^m$ REMOVED FROM SOLUTION AT FLOW RATES OF AIR BETWEEN 0.25 l min^{-1} AND 1.0 l min^{-1}

Flowrate l min^{-1}	0.25	0.40	0.60	0.80	1.0
Removed $^{81}Kr^m$ *fraction*	0.43	0.59	0.75	0.73	0.73

is shielded from view by the detector, using 5 cm of lead. Table 8.3 shows the percentage of the available $^{81}Kr^m$ removed at flow rates of 0.25 to 1.0 l min^{-1} of air. It will be seen that this first stage of the recovery of $^{81}Kr^m$ is quite efficient. The actual recovery efficiency observed at the end of a continuous dispensing system will, however, be somewhat lower than this due to decay in the generator dead volume above the solution and other necessary dead volumes in the system.

For the system shown in *Figure 8.19* values of the recovery efficiency determined at the measuring ionization chamber, range from 25 to 35 per cent at flow rates of 0.7 to 0.9 l min^{-1}. These values are obtained by comparing the production rate of $^{81}Kr^m$ in the generator, which may be calculated from its ^{81}Rb content (the decay rate of ^{81}Rb in disintegrations per second being equal to the production rate of $^{81}Kr^m$ in atoms per second), with the product recovery rate determined by the method described in section 3.7.1 (page 74). These figures are only intended to be used as a guide and each system should be tested in its final configuration before being put into clinical use to ensure that adequate levels of $^{81}Kr^m$ will be available and that the trap configuration and flow characteristics of the system are safe.

8.5 XENON-135 AND XENON-127

8.5.1 Introduction

^{133}Xe has been commercially available for many years both in solution and in the gas phase. It has been widely used in many fields of clinical investigation and physiological research (see section 8.1, page 261). Its use continues to increase as new applications are found and more sophisticated methods of analysing the resulting data are developed. However, several workers have pointed out that for some studies, particularly those requiring fine spacial selectivity, for example regional function studies, the gamma ray photons emitted by ^{133}Xe are of too low an energy[3,36,39,44].

Decay Properties

Two other radionuclides of xenon have been investigated as possible substitutes for ^{133}Xe for use in the most critical studies. These are ^{127}Xe ($T_{\frac{1}{2}} = 36.4$ d) and ^{135}Xe ($T_{\frac{1}{2}} = 9.2$ h). The simplified decay schemes of these two radionuclides are shown in *Figures 8.20 (a)* and *8.20 (b)* respectively. A gamma ray spectrum for ^{127}Xe is shown in *Figure 8.11*.

It can be seen that for ^{135}Xe a large fraction of the gamma rays is emitted at 250 keV, whereas ^{127}Xe has a more widely distributed range of emission energies making ^{127}Xe less desirable.

Methods of Production for Xenon-135

Xenon-135 is prepared by reactor irradiation of ^{235}U targets by the fission reaction $^{235}U(n,f)^{135}Xe$.

As the production of ^{135}Xe requires reactor irradiations it is beyond the scope of the authors. However, for completeness a brief description of some of the published methods of recovery of ^{135}Xe from reactor irradiated ^{235}U targets is included here. For full details the reader is referred to the original works.

There are basically two approaches to the recovery of ^{135}Xe. In the first, the irradiated target is removed from the reactor and the ^{135}Xe, together with other volatile fission products, is released by either dissolving or melting the target in a vessel where the ^{135}Xe may be recovered and purified on a vacuum line. The main disadvantage of this method is that all the fission products have to be handled soon after the end of irradiation. The method is also, by its nature, wasteful of ^{235}U unless extensive recovery procedures are adopted, again in the presence of gross fission product activity. However, advantages claimed for this approach are that no specific 'in core' facility is required and that target preparation is simple[1,14].

In the second approach the ^{135}Xe is recovered from an emanating target (a target where volatile products are readily released during irradiation). Specially prepared high surface area targets are irradiated in a reactor loop and the volatile products recovered continuously by trapping them out from the helium flow using liquid nitrogen[33,36].

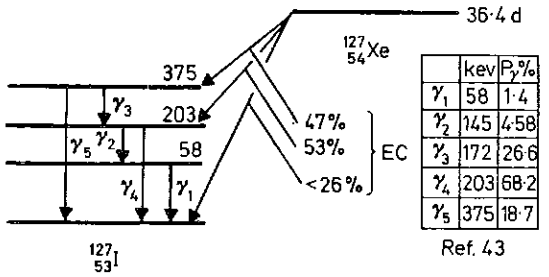

	kev	Pγ%
γ_1	58	1·4
γ_2	145	4·58
γ_3	172	26·6
γ_4	203	68·2
γ_5	375	18·7

Figure 8.20 (a) Simplified decay scheme for xenon-127

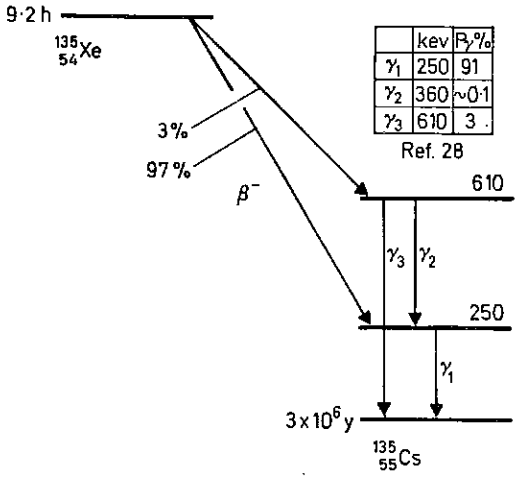

	kev	Pγ%
γ_1	250	91
γ_2	360	~0·1
γ_3	610	3

Figure 8.20 (b) Simplified decay scheme for xenon-135

The major advantage of the emanating target method is its potential application to high level production (0.1–1 curie) without the problems of handling all the fission products. An established disadvantage of some of the targets described, however, is a drastic lowering of the ^{135}Xe release efficiency, caused by thermal or radiation damage.

Methods of Production for Xenon-127

Xenon-127 may be produced by the deuteron or proton irradiation of targets containing iodine by the $^{127}I(d,2n)^{127}Xe$ and $^{127}I(p,n)^{127}Xe$ reactions respectively. In principle any anhydrous water soluble iodide may be used as the target material. An alternative route is by the $^{126}Xe(n,\gamma)^{127}Xe$ reaction using enriched ^{126}Xe (natural abundance 0.09 per cent). With a suitable recovery and repurification system the enriched ^{126}Xe could be recycled.

8.5.2 Target System Using Sodium Iodide for ^{127}Xe Production

Target Design, Preparation and Alternative Target Materials

Either powder or melted sodium iodide targets can be used for the deuteron or proton irradiations. The melted target is to be preferred for the same reasons as those outlined in section 8.2.2 (page 263) for NaBr targets. The use of LiI would similarly reduce the radiation hazard when handling the target.

Target Storage

As NaI and LiI are highly hygroscopic, storage both before and after irradiation should be in a dry atmosphere until required for processing if large losses of product are to be avoided. The target material rapidly becomes a solution if unprotected.

Yields

The 'on target yields' are critically dependent upon the target preparation and the conditions under which the irradiation has been carried out, thermal damage and moisture giving rise to large losses of the volatile product. The 'on target yields' for powder NaI targets may be estimated with little difficulty as the powder can be recovered almost quantitatively. A small representative fraction is then sealed in an ampoule to be assayed using a calibrated Ge/Li gamma ray spectrometer (see section 8.3.5, page 277) after allowing some time (~ 100 h) for the decay of most of the ^{24}Na.

Table 8.4 (*a*) shows the results obtained for irradiation of powder targets with 16 MeV deuterons at beam currents of 30–40 μA. A large degree of variability is apparent, this being largely due to variable losses of ^{127}Xe during irradiation, when the targets are damaged thermally.

Directly comparable values for melted NaI targets cannot be obtained due to difficulties encountered in trying to obtain a representative sample of the irradiated NaI. However, recovered yields obtained after processing the NaI targets as described in

section 8.5.3 (page 309) are shown in Table 8.4 (*b*) for a low current short irradiation and two high current long irradiations. It can be seen, assuming the recovery efficiency was the same throughout, that the yields at the higher currents do not differ very much from that at the low current. Of the targetry presently available the melted target is generally to be preferred on the grounds of reliability and ease of remote handling.

TABLE 8.4 (*a*)

'ON TARGET YIELDS' OF ^{127}Xe OBTAINED IN 16 MeV DEUTERON IRRADIATIONS OF POWDER NaI TARGETS

Irradiation no.	μA	μAh	*Irradiation time* h (*approx*)	*On target yield* μCi μAh^{-1}
1	30	15	0.5	67
2	30	58.3	2	41
3	30	57.7	2	31.6
4	34	36.7	1	29
5	35	40	1.2	52
6	40	8	0.25	47
7	40	20	0.5	44

TABLE 8.4 (*b*)

'RECOVERED YIELDS' OF ^{127}Xe FROM 16 MeV DEUTERON IRRADIATIONS OF MELTED NaI TARGETS

Irradiation no.	μA	μAh	*Irradiation time* h (*approx*)	*Recovered yield* μCi μAh^{-1}
8	10	1	0.1	54
9	30	30	1	40
10	30	30	1	34

Future Developments

Neither of the target systems described could be considered to be ideal. Further developments may include target systems that make use of the ease with which NaI releases the volatile ^{127}Xe when heated or dissolved. Target systems using either concentrated aqueous solutions[31] or melts containing NaI would seem attractive in this respect if the formidable corrosion problems, particularly involving the thin beam entry window, could be overcome.

8.5.3 Recovery of ^{127}Xe from Sodium Iodide Targets

General Principles

The ^{127}Xe is readily released from the NaI target material by dissolution of the latter. The dissolution must be carried out in a closed system with facilities for purging the solution with a suitable purge gas. Carbon dioxide is eminently suitable for this purpose as it can be readily removed at a later stage by absorption in NaOH solution. The apparatus used for the dissolution of the target material and subsequent recovery of the product is the same as that used for ^{79}Kr and is shown schematically in *Figures 8.3* and *8.4* and fully described in section 8.2.3 (page 266).

8.5.4 Dispensing

The methods used for dispensing ^{127}Xe are completely analogous to those used for ^{79}Kr and ^{85}Kr^{m} described in sections 8.2.4 (page 269) and 8.3.4 (page 276).

8.5.5 Quality Control

The quality control procedures employed for ^{127}Xe are the same as those described in sections 8.2.5 (page 270) and 8.3.5 (page 277) for ^{79}Kr and ^{85}Kr^{m}. A gamma ray spectrum of ^{127}Xe is shown in *Figure 8.11*.

REFERENCES

1. Alexander, P., Lau, J. P. and Sahagian, A. V. (1968). 'A system for rapid chemical separation and spectroscopic examination of fission gases.' *Nuclear Instrmnts and Methods* **64**, 323–7.
2. Amphlett, C. B., McDonald, L. A., Burgess, J. S. and Maynard, J. C. (1959). 'Synthetic inorganic ion-exchange materials-III. The separation of rubidium and caesium on zirconium phosphate.' *J. Inorgan. and Nuclear Chem.* **10**, 69.
3. Arnot, R. N., Clark, J. C. and Glass, H. I. (1971). 'Investigation of xenon-127 as a tracer for the measurement of regional cerebral blood flow.' In *Brain and Blood Flow*, p. 16. (Ed. R. Russell.) London; Pitman.
4. Arnot, R. N., Glass, H. I., Clark, J. C., Davis, J. S., Schiff, D. and Picton-Warlow, C. G. (1970). 'Methods of measurement of cerebral blood flow in the newborn infant using cyclotron produced isotopes.' *Radioactive Isotope in Klinik und Forschung*, 9, p. 60. Munchen, Berlin & Wien; Urban and Schwarzenberg.
5. Artna, A. (Compiler) (1966). Nuclear data. A-chain = 79 Section B. **1** No. 4.
6. Baedecker, P. A. (1971). 'Digital methods of photopeak integration in activation analysis.' *Analyt. Chem.* **43**, 405.

L

[7] Bell, G. and Harper, A. M. (1965). 'Measurement of local blood flow in the renal cortex from the clearance of krypton-85.' *J. Surg. Res.* **5**, 9, 382.

[8] Bru, A., Combes, P. F., Douchez, J., Lucot, H. and Ribot, J. F. (1971). 'Estimation of circulatory activity inside malignant gangliar tumours by measuring the ^{133}Xe clearance rate: Study of modifications under radiotherapy.' *Dynamic Studies with Radioisotopes in Medicine*, p. 633. IAEA, ST1/PUB/263.

[9] Chidsey, C. A. III, Fritts, H. W. Jr., Hardewig, A., Richards, D. W. and Cournand, A. (1959). 'Fate of radioactive (^{85}Kr) introduced intravenously in man.' *J. Appl. Physiol.* **14**, 63.

[10] Clark, J. C., Jones, T. and MacIntosh, A. (1970). '^{81}Kr^{m} an ultra short-lived inert gas tracer for lung ventilation and perfusion studies with the scintillation camera.' *Radioactive Isotope in Klinik und Forschung*, 9, p. 444. Munchen, Berlin & Wien; Urban and Schwarzenberg.

[11] Cosgrove, M. D. and Evans, K. (1968). 'The use of inert radioactive gases to measure blood flow in the perfused kidney.' In *Blood Flow through Organs and Tissues*, p. 429. Edinburgh and London; Livingstone.

[12] Cotton, L. T. and Richards, J. (1968). 'The measurement of venous blood flow by the method of local thermal dilution.' In *Blood Flow through Organs and Tissues*, p. 14. Edinburgh and London; Livingstone.

[13] Crouthamel, C. E. (1970). *Applied Gamma-Ray Spectrometry*. 2nd edn by F. Adams and R. Dams. Oxford; Pergamon.

[14] Fritz, K. and Robertson, R. (1968). The preparation of ^{135}Xe samples for medical purposes.' *Radiochim. Acta* **9**, 221–2.

[15] Gal, I. J. and Gal, O. S. (1958). 'The ion exchange of uranium and some fission products on titanium and zirconium phosphates.' *Second U.N. Conference on Peaceful Uses of Atomic Energy, Geneva, 1958*, paper 468.

[16] Garnett, E. S., Goddard, B. A., Markby, D. and Webber, C. (1969). 'The spleen as an arterio-venous shunt.' *Lancet* **1**, 386.

[17] Glass, H. I. (1972). 'Theory of current techniques of measuring cerebral blood flow.' *J. Nuclear Biol. and Med.* **16**, 4, 267–73.

[18] Glass, H. I., Arnot, R. N., Clark, J. C. and Allan, R. N. (1969). 'The use of a new cyclotron produced isotope Krypton-85m for the measurement of cerebral blood flow.' In *Cerebral Blood Flow*, p. 63. Berlin; Springer-Verlag.

[19] Glass, H. I. and Harper, A. M. (1963). 'Measurement of regional blood flow in cerebral cortex of man through intact skull.' *Br. Med. J.* **1**, 593.

[20] Ingvar, D. H. and Lassen, N. A. (1962). 'Regional blood flow of the cerebral cortex determined by krypton-85.' *Acta physiol. scand.* **54**, 325.

[21] Jacoby, H. E., Arnot, R. N., Glass, H. I. and McClure Browne, J. C. (1972). 'Estimation of clearance rate of inhaled xenon-133 in the placental region of the pregnant uterus.' *J. Obstet. Gynec. Br. Cmnwlth.* **79**, 531.

[22] Jones, T. and Clark, J. C. (1969). 'A cyclotron produced ^{81}Rb–^{81}Kr^{m} generator and its uses in gamma camera studies.' *Br. J. Radiol.* **42**, 237.

[23] Jones, T., Clark, J. C., Hughes, J. M. and Rosenweig, D. Y. (1970). '^{81}Kr^{m} Generator and its uses in cardiopulmonary studies with the scintillation camera.' *J. Nuclear Med.* **11**, 118.

[24] Jones, T. and Matthews, C. M. E. (1971). 'Tissue perfusion measured using the ratio of ^{81}Rb to ^{81}Kr^{m} in the tissue.' *Nature*, Lond. **230**, 119.

[25] Jones, T., Pettit, J. E., Rhodes, C. G. and Waters, S. L. (1973). 'Use of ^{81}Rb-^{81}Kr^{m} ratio for the measurement of spleen blood flow.' *J. Nuclear Med.* **14**, 414. (Abstract.)

[26] Lassen, N. A. (1964). 'Measurement of blood-flow through skeletal muscle by intramuscular injection of xenon-133.' *Lancet* **1**, 686.

[27] Lassen, N. A. and Ingvar, D. H. (1961). 'The blood flow of the cerebral cortex determined by radioactive krypton-85.' *Experientia* **17**, 42.

[28] Lederer, C. M., Hollander, J. M. and Perlman, I. (1967). *Table of Isotopes*, 6th edn. New York; Wiley.

[29] Ledingham, I. McA., McGuiness, J. B., Tindal, S. A. P., Tilston, D. and Gillespie, F. C. (1968). 'Theoretical and practical considerations in the measurement of cardiac output with ^{133}Xe.' In *Blood Flow through Organs and Tissues*, p. 90. Edinburgh and London; Livingstone.

[30] Lewis, B. M., Sokoloff, L., Wechsler, R. L., Wentz, W. B. and Kety, S. S. (1960). 'A method of continuous measurement of cerebral blood flow in man by means of radioactive krypton (Kr-79).' *J. Clin. Invest.* **39**, 707.

[31] Lindner, L., Brinkman, G. A., Suer, T. H. G. A., Schimmel, A., Veen Boer, J. Th., Karten, F. H. S., Visser, J. and Leurs, C. J. (1973). 'Accelerator production of ^{18}F, ^{123}Xe(^{123}I), ^{211}At and ^{38}S.' *IAEA/WHO Symposium on New Developments in Radiopharmaceuticals and Labelled Compounds, Copenhagen, March 1973.* IAEA ST1/PUB/344 Vol 1, p. 303.

[32] McBride, T. I. and Ledingham, I. McA. (1968). 'Clearance of ^{133}Xe from the myocardium as a measure of myocardial blood flow with special reference to the influence on flow of increase of oxygen tension.' In *Blood Flow through Organs and Tissues*, p. 100. Edinburgh and London; Livingstone.

[33] McLain, M. E. (Jnr) (1973). 'Xenon-135 routine production and advantages in medical diagnostic procedures.' *IAEA/WHO Symposium on New Developments in Radiopharmaceuticals and Labelled Compounds, Copenhagen, March 1973.* IAEA ST1/PUB/344 Vol 2, p. 223.

[34] Maeck, W. J., Kussy, M. E. and Rein, J. E. (1963). 'Adsorption of the elements on inorganic ion exchangers from nitrate media.' *Analyt. Chem.* **35**, 2086.

[35] Mallett, B. L. and Veal, N. (1965). 'The measurement of regional cerebral clearance rates in man using xenon-133 inhalation and extracranial recording.' *Clin. Sci.* **29**, 179.

[36] Newhouse, M. T., Wright, F. J., Ingham, G. K., Archer, N. P., Hughes, L. B. and Hopkins, O. L. (1968). 'Use of scintillation camera and ^{135}Xe for study of topographic pulmonary function.' *Respirat. Physiol.* **4**, 141.

[37] Nuclear Data. Section B—A Journal devoted to Compilations and Evaluations of Experimental and Theoretical Results in Nuclear Physics. New York; Academic Press.

[38] Pontonnier, G., Delmas, H., Carre, J. and Favretto, R. (1971). 'Measurement of placental blood flow with ^{133}Xe in normal and pathological

human pregnancy.' *Dynamic Studies with Radioisotopes in Medicine*, p. 611. IAEA, ST1/PUB/263.

[39] Potchen, E. J., Davis, D. O., Wharton, T., Hill, R. and Taveras, J. M. (1969). 'Regional cerebral blood flow in man: A study of the ^{133}Xe washout method.' *Neurology* **20**, 378.

[40] Robinson, R. L. (1965). 'Decay of ^{79}Kr–^{79}Br.' ORNL 3778, p. 119.

[41] Ross, R. S., Ueda, K., Lichtlen, P. R. and Rees, J. R. (1964). 'Measurement of myocardial blood flow in animals and man by selective injection of radioactive inert gas into the coronary arteries.' *Circulation Res.* **15**, 28.

[42] Hospital Technical Memorandum No. 8 (1969). *Safety Code for Electromedical Apparatus*, revised edn. London; H.M.S.O.

[43] Schmidt-Ott, W. D., Wierauch, W., Smend, F., Langhoff, H. and Gföller, D. (1968). 'Der Zerfall des ^{125}Xe^{m}, des ^{127}Xe^{m} und des ^{127}Xe^{g}.' *Zeitschr. fur Physik* **217**, 282.

[44] Ter-Pogossian, M. M., Niklas, W. F., Ball, J. and Eichling, J. O. (1966). 'An image tube scintillation camera for use with radioactive isotopes emitting low-energy photons.' *Radiology* **86**, 463.

[45] Wagner, H. N. (1964). 'Regional blood-flow measurements with krypton-85 and xenon-133.' *Dynamic Clinical Studies with Radioisotopes*, p. 189. TID-7678. USAEC Division of Technical Information Extension, Oak Ridge, Tennessee.

[46] Waters, S. L., Silvester, D. J. and Goodier, I. W. (1970). 'Decay of ^{81}Rb.' *Physical Rev.* C, **2**, 2441.

[47] Watson, I. A. (1970). 'The production of ^{81}Rb and ^{82}Rb^{m} for medical use.' *Radiochem. and Radioanalyt. Letters* **4**, 7.

[48] West, J. B. (1967). *The Use of Radioactive Materials in the Study of Lung Function.* UKAEA, revised edn. Medical Monograph No. 1. Amersham, England; The Radiochemical Centre.

[49] Williams, R., Parsonson, A., Somers, K. and Hamilton, P. J. S. (1966). 'Portal hypertension in idiopathic tropical splenomegaly.' *Lancet* **1**, 329.

[50] Yano, Y., McRae, J. and Anger, H. O. (1970). 'Lung function studies using short-lived ^{81}Kr^{m} and the scintillation camera.' *J. Nuclear Med.* **11**, 674.

Safety Precautions

9.1 INTRODUCTION

In all procedures involving the use of radioactive materials, compressed gases and chemical reagents, an element of danger is invariably present. The production and processing of radioactive gases is certainly no exception. In this chapter we do not propose to cover in detail the more general aspects of laboratory safety which are well documented elsewhere[4,10,11]. Rather, we shall briefly consider some of the more important aspects of safety in so far as they apply to the production and processing of short-lived radioactive gases for clinical use.

9.2 RADIATION HAZARDS

9.2.1 Maximum Permissible Doses and Radiation Measurement

The maximum permissible doses of ionizing radiation from external sources for adults exposed in the course of their work are laid down by the International Commission on Radiological Protection[6,7]. These levels are shown in Table 9.1.

Since many of the radioactive gases with which we are concerned are β^{+} emitters, the use of β absorbing spectacles is essential to prevent high corneal doses. The use of a β particle absorber consisting of a 6 mm Perspex sheet, over flowmeters, exposed thin walled tubing and anaesthetic bags containing radioactive gas is strongly recommended.

A portable geiger or scintillation dose rate meter should be available for general monitoring purposes. In addition to the film badges normally worn, the use of personal quartz fibre ionization

TABLE 9.1*

MAXIMUM PERMISSIBLE ORGAN AND TISSUE DOSES

Exposed part of the body	*Designated persons*		*Non-designated persons*		
	Over 18 years	*16–18 years*	*Over 18 years*	*16 18 years*	*Under 16 years*
Whole body, blood forming organs, gonads	5(N-18) rems (see note (2)) 3 rems/ calendar quarter	1.5 rems/ year (see note (4))	1.5 rems/ year	1.5 rems/ year (see note (4))	0.5 rems/ year (see note (4))
Skin and bone (except the skin and bone of the hands, forearms, feet and ankles), thyroid	8 rems/ calendar quarter 30 rems/ year	3 rems/ year	3 rems/ year	3 rems/ year	3 rems/ year
Other single organs	4 rems/ calendar quarter 15 rems/ year	1.5 rems/ year	1.5 rems/ year	1.5 rems/ year	1.5 rems/ year
Hands, forearms, feet and ankles	20 rems/ calendar quarter 75 rems/ year	7.5 rems/ year	7.5 rems/ year	7.5 rems/ year	7.5 rems/ year

* Reproduced by courtesy of Her Majesty's Stationery Office[2]. The values for the maximum permissible doses given in Table 9.1 are based on the recommendations of the International Commission on Radiological Protection adopted in September 1958 and 1959 and take account of the views of the Medical Research Council's Committee on Protection against Ionizing Radiations.

Notes on Table 9.1

The figures in Table 9.1 are based on the expression of 'dose equivalent' in rems in which quality factors[2,7] for known types of radiation are taken into account. For x-rays, gamma rays, electrons and beta rays of E_{max} greater than 30 keV, the quality factor is unity, i.e. 1 rem = 1 rad.

(1) Calculations should normally be made over calendar periods, but where doses are liable to be accumulated at grossly irregular rates a period of 13 weeks should be used instead of the calendar quarter and the accumulated dose should be ascertained weekly.

(2) 5 (N-18) is the maximum permissible cumulative dose up to the end of the current calendar year, where N is the present age in years (part of a year counting as a year). This formula allows an average exposure of 5 rems per year from the age of 18. Within this cumulative dose a designated person may receive up to 12 rems a year, of which not more than 3 may be received in any one quarter.

(3) Where a person has previously been engaged in work of a type which would have required him to be designated had it been covered by this Code, but no information is available as to the doses actually received, a dose, at the rate of 5 rems a year to the whole body, blood forming organs and gonads should be assumed for the period during which he was engaged on such work.

(4) Where a person has worked with ionizing radiations before reaching the age of 18, subsequent exposure must be so controlled that the total dose accumulated by the age of 30 must not exceed 60 rems in the case of a designated person or 18 rems in the case of a non-designated person.

(5) Where a radiation dose received by accident or during an emergency results in the maximum permissible dose laid down in Table 9.1 being exceeded, the accidental or emergency dose may, exceptionally and with the express approval of the Controlling Authority, acting with the advice of the Medical Adviser and such other expert advice as they may require, be treated as if it were received over an extended period. This notional exposure period must be kept to the minimum and must not in any case exceed 5 years.

chambers and pocket γ alarm monitors can give immediate indications of an individual's received dose and dose rate. Finger films or thermoluminescent dosemeters (TLDs) should also be worn if high finger doses are likely to be received.

9.2.2 The Handling and Storage of Cyclotron Targets and Other Sources of High Activity

If several radioactive gases are to be produced sequentially it may be necessary to change targets during a clinical session. Even at the end of a session it is frequently necessary to remove the target in order that the cyclotron may be used for other irradiations. In the event of a target window failure it may be necessary to replace the target quickly. Ideally this should be done by remote control, spare targets being available on a movable actuator in front of the beam exit port. However, in practice this is not always the case and targets may have to be handled manually. Manual manipulation of the target and its contents is also necessary for target efficiency measurements. For this reason, such measurements should always be made at the lowest practicable integrated beam current.

The material from which a target is made largely determines the amount of residual activity following a bombardment. If the target is made of aluminium, most likely nuclear reactions result in radionuclides with short half-lives, an exception being ^{24}Na produced by the ^{27}Al(d,αn)^{24}Na reaction. When brass targets are used they can become increasingly active due to the production of ^{65}Zn by the ^{65}Cu(d,2n)^{65}Zn reaction. Long-lived radionuclei can also be formed in stainless steel and magnesium target windows. Thus to avoid high finger doses care is necessary when handling targets. A small lead lined trolley is of value when transporting targets to and from the cyclotron chamber.

Targets should be stored behind at least 5 cm of lead. It may be convenient to have dummy mounting plates inside the lead enclosure, on which targets may be hung whilst they are being stored.

Other potential sources of high finger dose are storage systems and samples of high activity gas and solution. Whenever possible these should be handled remotely behind lead shielding and in any case, plenty of use should be made of the inverse square law!

9.2.3 Other Radiation Hazards

There are a number of other radiation hazards associated with the production of radioactive gases. These can arise from unshielded gas transmission tubes, long-lived contaminant build up in closed circuit systems and ^{15}O production in the air blast used for target

window cooling. Furnace reagent tubes and absorbers can also constitute a radiation hazard and should be suitably shielded.

The efficient operation of waste gas scavenge pumps is necessary to ensure that even under worst case conditions, active gas does not diffuse back through air inlet ports. Ventilation of the clinical investigation suite *via* the dispensing fume cupboard will ensure that no activity enters the room from the dispensing facility. Leaks of radioactive (and inactive) gas can be a serious health hazard and a section on leak testing will be found at the end of this chapter.

9.3 CHEMICAL HAZARDS

9.3.1 Fire and Explosion Risks

Great care should be taken when inflammable gases or gases which support combustion are used. A good example is the use of hydrogen as a sweep gas. Provided the system is gas tight and air is not used as the scavenging gas, the risk is minimized. If air is used as the scavenging gas, large volumes in the system should be avoided and the air/hydrogen ratio should be kept well below the explosive limit[1,3]. The range of inflammability of hydrogen in air is 4 to 75 per cent[3]. All gas transmission tubes used with hydrogen should be electrically bonded to earth.

The contents of compressed gas cylinders should always be clearly marked. Although some cylinders are colour coded, this should not be relied upon since unfortunately no international colour code for gas cylinders exists at present. Gas cylinders should never be stored close to any fire risk. If stored in a room, there should be good top and bottom ventilation in case of leakage; if stored in the open air, cylinders should be shaded from the sun in a well-ventilated fireproof shelter. Grease or oil should *never* be used on gas cylinder fittings.

Another source of fire risk is Drikold* mixtures made with acetone. Whilst such mixtures have a lower temperature (−85 °C) than those made with alcohol (IMS)† (−72 °C), the use of IMS for such mixtures is to be preferred because of its higher flash point.

Care should be taken to ensure that nylon sweep gas tubes to targets are supported in such a manner that they cannot come into contact with the target under any circumstances during bombardment. This is particularly necessary if the target is mounted on a remotely controlled movable actuator. The external surfaces of some targets can reach a temperature in excess of 200 °C, well above the

* Drikold: solid CO_2 supplied by Distillers Co. Ltd.

† IMS = Industrial methylated spirit.

melting point of nylon. The consequences of hydrogen sweep gas tubes coming into contact with such targets hardly need emphasis!

Fire risks can also arise from faulty furnace temperature controls. A common source of trouble is a sticking energy regulator which allows the furnace temperature to rise unchecked. Where such regulators are used it is a wise precaution to include a thermal fuse or cut out in the circuit, actuated by any undue rise in furnace temperature. Where an indicating controller is used it should include a thermocouple break protection facility which automatically switches off the furnace in the event of thermocouple failure.

Carbon dioxide fire extinguishers should be used for all fires in radioactive gas production and processing equipment.

9.3.2 The Inhalation of Toxic and Inflammable Gases

Whilst it is the responsibility of the clinician in charge to ensure that no patient inhales any dangerous quantity of toxic or inflammable gas, it behoves all concerned with the use of such gases to be aware of the risks involved. The most serious danger arises from the accidental inhalation of CO. The maximum concentration of this gas that can be breathed for several hours without apparent ill effects is 0.01 per cent and this should be deemed the upper limit of safety[8]. A concentration of 0.1 per cent can cause symptoms at rest and a 1 per cent concentration can be fatal in about 20 min. At higher levels, e.g. 1.3 per cent, death can occur in 1–3 min[8]. It is therefore scarcely necessary to add that the utmost care should be taken when this gas is being used, albeit in low concentration mixtures.* It should be noted that a concentration of almost 100 per cent CO can be obtained at the target output of the $^{13}N_2$ production system using the graphite matrix target (section 6.3.2, page 200 and *Figure 6.9*) even though the sweep gas is CO_2.

Other toxic gases (usually encountered only in trace amounts in this work) are HCN, NO and NO_2. The recommended threshold limit for HCN is 10 ppm (parts per million). Concentrations of 100–140 ppm are dangerous within one hour; a concentration of 3000 ppm is rapidly fatal[1].

NO is partially converted by atmospheric oxygen into NO_2. Thus, exposure to nitric oxide is in all probability an exposure to a mixture of nitric oxide and nitrogen dioxide. A tentative threshold limit of 25 ppm for NO and a threshold value of 5 ppm for NO_2 is recommended[1].

* When gas mixtures containing CO are being used it is advisable to have a cylinder of oxygen complete with breathing mask available for emergency use.

Concentrations of the nitrogen oxides as low as 100–150 ppm can be dangerous if inhaled for 30–60 min; concentrations of 200–700 ppm can be fatal after even very short exposures[1].

Ozone, produced in the air gap between the charged particle beam exit port and the target beam entry window, is also a hazard, quite apart from its radioactivity. The threshold odour level of ozone is 0.01–0.02 ppm. The safe level for continuous exposure is about 0.1 ppm. Concentrations above 1 ppm are extremely pungent[1].

Great care should be taken to ensure that the maximum inhaled concentration of air/H_2 mixture is well below the explosive limit. In no circumstances should the H_2 concentration exceed 0.7 per cent[1,3] (see section 4.1.2, page 106).

9.3.3 Liquefied Gases and Low Temperature Solutions

The usual danger when handling liquefied gases and low temperature solutions is that of burns and severe frostbite. Care should therefore be taken not to spill liquefied gases onto exposed clothing since bad burns can result from contact with clothing into which they have soaked. Where protective gloves are used they should be impermeable to the liquefied gas and thermally insulating. If they are not, it is better to keep the hands bare when pouring such gases since evaporation from the skin is so rapid that little damage is caused[11].

Goggles or face shields should be worn when transferring liquefied gases. Liquid air should never be used instead of liquid nitrogen for low temperature baths.

Solid carbon dioxide (dry ice) should always be handled with protective gloves. When using it for making low temperature solutions, alcohol should be used and the solid CO_2 added in small pieces.

Vessels containing liquefied gases or low temperature solutions should never be sealed; if they are they may explode.

9.4 ELECTRICAL HAZARDS

9.4.1 Electric Shock

There is a risk of electric shock when handling any live electrical wiring, connectors or equipment. The danger threshold is only some 15 mA a.c. and 75 mA d.c.[9], and the current produced by only 60 v has proved fatal[10]. Ventricular fibrillation (which is generally fatal) can occur at a current of 70 mA a.c. or 300 mA d.c.[9]. If connection is made directly to the heart, however, the danger of ventricular

fibrillation is considerably increased; experience has shown that this can occur with currents as low as 0.5 mA. Thus the utmost care should be taken when handling live apparatus and especially when procedures such as cardiac catheterization are undertaken[5,9].

The danger of severe electric shock from EHT power supplies is not to be underestimated. Such units may produce output voltages of 3000 v at a current of several milliamperes. When several scintillation counters are supplied simultaneously the output impedance of the EHT unit is necessarily low; particular care should thus be taken if this is the case. Whenever possible, it is safest to work with the highest output impedance consistent with satisfactory performance of the counting equipment.

9.4.2 Furnaces

Furnaces used in radioactive gas processing equipment may have ratings ranging from 100 W to 3 kW. It is essential that such furnaces are fitted with fuses or circuit breakers of the correct rating and that all metal parts are properly bonded to earth. The fire risks which can arise from some furnace faults are covered in section 9.3.1 (page 317).

9.5 MECHANICAL HAZARDS

Unstable compressed gas cylinders constitute a mechanical hazard. Cylinders should always be secured in position with an adjustable chain or similar device.

Another source of danger is a wall of lead shielding bricks which is too high for stability. When lead enclosures are being built, consideration should be given to their total weight and stability and if necessary they should be reinforced with steel angle or tensioned steel wire.

Gas mixing plants and pressure vessels need to be operated well within their design limits if accidents are to be avoided. Pressure and vacuum gauges on such apparatus should be fitted with safety glass and be situated behind an open mesh metal safety screen.

9.6 LEAKS AND LEAK TESTING

It is essential that a radioactive gas system should be as leak free as possible if it is to operate safely and be free of contaminating gases. However, it is inevitable that leaks will occur occasionally, necessitating a method of rapid and precise leak detection.

Gas leaks generally become evident by a departure from nominal pressure and flow rate conditions, a rise in the background count rate or, less frequently, by a change in the contaminant level during a given bombardment. The target is one of the most likely sources of leakage. Others include taps and valves, flowmeter connections, pressure gauges, 'O' ring seals and poorly assembled compression fittings.

It may at first sight appear to be a relatively simple matter to find a leak in a radioactive gas system since the escaping active gas itself constitutes a readily detectable tracer component. Whilst this is true in principle—an increase in the background count rate is often the first indication of a leak—there are several disadvantages in using such a technique for precise leak detection, the most serious of which is the possibility of having to work in an environment of escaping gas. Thus the radioactive method is only of practical value for general leak indication, any significant leaks being detected in the suite ventilation exhaust system (section 4.2.3, page 110). Alternatively the presence of a β particle emitting gas in the atmosphere is easily detected using a thin-walled geiger probe with a movable β absorbing window; the count rate increases when the window is opened. To prevent misleading readings the probe should be pointed away from unshielded β particle sources, e.g. radioactive gas transmission tubes, when making such a measurement.

Having established that a leak is occurring it may be located by non-radioactive methods. With the charged particle beam switched off, but the sweep gas still flowing it is usually possible to ascertain the approximate location by observation of pressure gauges and flowmeters. Further indication may be obtained by isolating and temporarily by-passing parts of the system such as the target, a furnace or an absorber, and noting if pressure and flow conditions return to normal.

Another method is to trace the source of the leak, starting at the system output and gradually working back towards the sweep gas supply cylinder. It will be noted that a flowmeter is invariably included in the initial stages of the gas flow systems described. If the system output is closed with the sweep gas on, this flowmeter will indicate zero flow rate only in the absence of a leak. In the presence of a leak the system should be sequentially isolated (starting from the point most distant from the flowmeter) until the flow rate falls to zero; the offending section(s) of the system is then readily identified. This method is also useful for testing individual items of equipment such as targets and pressure vessels. Clearly its sensitivity is dependent upon that of the flowmeter and the pressure

used. If a suitable flowmeter is used leak rates of less than 1 ml min^{-1} are readily detected.

A simple and highly sensitive method of leak detection is to brush a solution of water and liquid detergent on the suspected joint and look for bubble formation. The presence of an extremely small leak can be determined by pressurizing a suspect component and observing the pressure drop as a function of time. When complete systems are pressurized for leak testing care should be taken not to exceed the maximum safe working pressure of the weakest component. Inflammable gases should only be used for pressure testing where the use of other gases is impossible or undesirable.

Extremely small leaks (1×10^{-8} ml s^{-1}) may be detected using tracer gases such as SF_6 in conjunction with an electron capture detector. Commercial instruments are available which use this principle. The action on reagents (hot or cold) of gases used for leak testing should always be considered. Whenever possible, furnaces should be switched off and left to cool, or by-passed. If foreign gases have been introduced into a system, it should be thoroughly purged before use.

9.7 CONCLUSION

In this chapter we have briefly considered some of the hazards which may be encountered in the operation of a radioactive gas production and processing system and its associated equipment. Such systems are safe and reliable provided they are well engineered and operated within their design limits.

Improvements can always be made to existing techniques. The information presented in this monograph is based upon systems of proven performance. It is hoped that it will be of value to those concerned with the preparation of short-lived radioactive gases for clinical use.

REFERENCES

[1] Braker, W. and Mossman, A. L. (1971). *Matheson Gas Data Book*, 5th edn. New Jersey, U.S.A., Matheson Gas Products.

[2] Ministry of Labour (1964). *Code of Practice for the Protection of Persons Exposed to Ionizing Radiations in Research and Teaching*. London; H.M.S.O.

[3] Coward, H. F. and Jones G. W. (1952). *Limits of Flammability of Gases*

and Vapors. Bulletin 503, Bureau of Mines, Government Printing Office, Washington 25, D.C., U.S.A.

[4] Dodd, R. E. and Robinson, P. L. (1957). *Experimental Inorganic Chemistry*, p. 411. Amsterdam; Elsevier.

[5] Green, H. L., Raftery, E. B. and Gregory, I. C. (1972). 'Ventricular fibrillation threshold of healthy dogs to 50 Hz current in relation to earth leakage currents of electro-medical equipment.' *Bio-Med. Engng.* 7, 9, 408–14.

[6] International Commission on Radiological Protection (1966). Publication 9. Oxford; Pergamon Press.

[7] International Commission on Radiological Protection (1970). Publication 15: *Protection against Ionizing Radiation from External Sources*. Oxford; Pergamon Press.

[8] Polson, C. J. and Tattersall, R. N. (1959). *Clinical Toxicology*, p. 550. London; English Universities Press.

[9] Ministry of Health (1969). *Safety Code for Electro-medical Apparatus*. Hospital Technical Memorandum No. 8, revised edn. London; H.M.S.O.

[10] Ministry of Technology (1964). *Safety Measures in Chemical Laboratories*, 3rd edn. London; H.M.S.O.

[11] Medical Research Council (1970). *Safety Precautions in Laboratories*. London; Medical Research Council.

Appendix 1

Target Efficiency Measurement—the Determination of 'Combined Target Efficiency'*

The value of 'combined efficiency', E_C may be determined from the following expression:

$$E_C = \frac{\textit{The number of product nuclei recovered from the target per unit time}}{\textit{The number of product nuclei produced in the target per unit time}}$$

The number of product nuclei recovered from the target per unit time

This parameter is derived from a *dynamic* bombardment at a *normal* beam current to establish the rate of recovery of product nuclei under given practical irradiation and flow rate conditions. The product nuclei are continuously removed from the target with a suitable sweep gas and passed through a measuring spiral in a calibrated ionization chamber.

Let the beam current be I μA

Let the sweep gas flow rate be F ml s^{-1}

Let the spiral volume be V ml

Now if the bombardment is made with I and F constant, the activity in V will reach a steady state at dynamic equilibrium.

Let this activity be A disintegrations s^{-1}

Now $A = \lambda N$ where: λ is the decay constant of the species (s^{-1})
N is the number of active atoms in the spiral.

$$\therefore \quad N = \frac{A}{\lambda}$$

$$\therefore \quad \text{Concentration of active species in spiral} = \frac{N}{V}$$

$$= \frac{A}{\lambda V} \text{ atoms ml}^{-1}$$

* See section 2.3, page 35.

Now if the transit time of a bolus of gas through the spiral is small compared to the half-life of the nuclide, we can neglect decay in the spiral.

Thus the number of active atoms per unit time passing through the spiral

$$= \frac{NF}{V} = \frac{AF}{\lambda V} \text{ atoms s}^{-1}$$

Hence the number of active atoms leaving the target per unit time

$$= \frac{AF}{\lambda V e^{-\lambda T}} \text{ atoms s}^{-1}$$

where T is the transit time in seconds for a bolus of gas to pass from the target outlet to the spiral, i.e. the number of product nuclei recovered from the target per unit time at dynamic equilibrium at a beam current of I is:

$$\frac{AF}{\lambda V e^{-\lambda T}} \qquad (1)$$

The number of product nuclei produced in the target per unit time

This parameter is derived from a *static* bombardment at a *low* beam current to determine the activity induced in the target material

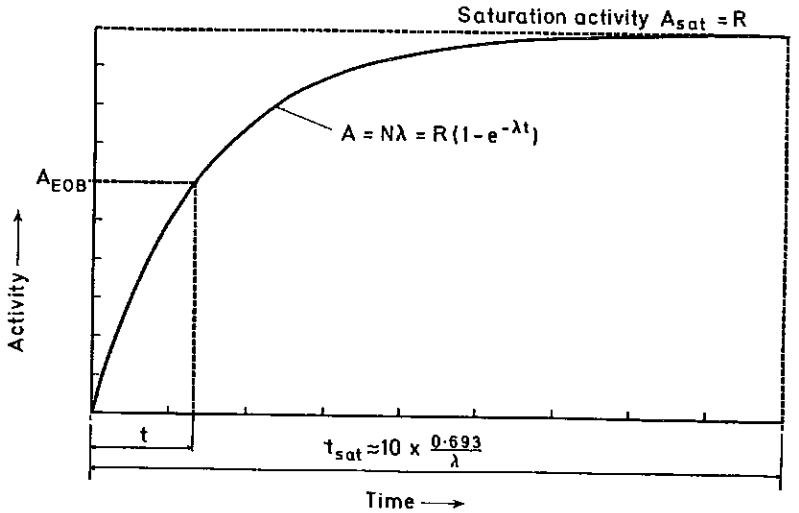

Figure A1.1 Induced activity A (disintegrations s^{-1}) *versus* time t at a constant production rate R (atoms s^{-1})

under conditions where there is no loss of product nuclei from the target. The target is therefore sealed during this bombardment. The irradiation time can be shorter than that required to produce saturation activity provided the beam current and irradiation time are accurately known (see *Figure A1.1*). As soon as possible after the end of bombardment (EOB) the target material and any volatile labelled products are removed from the target and measured in a calibrated ionization chamber.

Let the beam current be I′ μA

Let the bombardment time be t seconds

Let the activity induced in the target material after time t be A_{EOB} disintegrations s^{-1}

Then $A_{EOB} = \lambda N_{EOB}$ where λ is the decay constant of the species s^{-1} and N_{EOB} is the number of active atoms in the target material at end of bombardment.

$$\therefore \quad N_{EOB} = \frac{A_{EOB}}{\lambda}$$

From *Figure A1.1* it will be seen that:

$$N_{EOB} = \frac{R}{\lambda}(1 - e^{-\lambda t}) \quad *$$

where R is the production rate of active atoms.

$$\therefore \quad \frac{A_{EOB}}{\lambda} = \frac{R}{\lambda}(1 - e^{-\lambda t})$$

$$\therefore \quad R = \frac{A_{EOB}}{(1 - e^{-\lambda t})} \text{ atoms s}^{-1}$$

This is the production rate of active atoms at a beam current of I′.

Therefore the number of product nuclei produced in the target material per unit time at a beam current of I is:

$$\frac{I A_{EOB}}{I'(1 - e^{-\lambda t})} \qquad (2)$$

Hence, the combined efficiency $E_C = \frac{(1)}{(2)} \times 100\%$

$$= \frac{AFI'(1 - e^{-\lambda t})}{A_{EOB} I \lambda V e^{-\lambda T}} \times 100\%$$

* *Nuclear and Radiochemistry*, page 78. G. Friedlander, J. W. Kennedy and J. M. Miller. J. Wiley and Sons Inc., New York (1966).

M

Appendix 2

The Analysis of Radiochromatograms of Radioactive Gases having a Short Half-Life*

The time taken for the components of a mixture of radioactive gases to pass through a radio-gas chromatograph is often comparable to their half-lives. Thus when data is being analysed from a radiochromatogram, due allowance must be made for the decay of these components between the time of injection (or time of sampling) and the time of detection.

A typical radiochromatogram is shown schematically in *Figure A2.1*. A simple case is the analysis of a mixture of $^{13}N_2$ and ^{11}CO, this being possible using a molecular sieve (MS) column only. The $^{13}N_2$ is eluted first (peak A) followed by the ^{11}CO (peak B). The areas under the peaks (accumulated counts, less background) are representative of the amounts of activity present in the components at the times of detection, t_1 and t_2. Thus to determine the activity of the components at the time of injection (or sampling) t_0, it is necessary to correct each peak area by a factor dependent upon the decay constant of the nuclide concerned, and the time between t_0 and t_1 or t_2 as the case may be. Hence the correction factors for peaks A and B are $e^{\lambda_{13N}t_1}$ and $e^{\lambda_{11C}t_2}$ respectively, i.e. the $^{13}N_2$ contribution at t_0 is $Ae^{\lambda_{13N}t_1}$ counts and the ^{11}CO contribution at t_0 is $Be^{\lambda_{11C}t_2}$ counts where:

A is the area of the $^{13}N_2$ peak (counts)
B is the area of the ^{11}CO peak (counts)
λ_{13N} is the decay constant for ^{13}N (s^{-1})
λ_{11C} is the decay constant for ^{11}C (s^{-1})
t_1 is the time of detection of the $^{13}N_2$ peak A (s)
t_2 is the time of detection of the ^{11}CO peak B (s)

* See section 3.2.3, page 53.

Thus the proportion of $^{13}N_2$ present in the sample at t_0 is given by:

$$\frac{Ae^{\lambda_{13N}t_1}}{Ae^{\lambda_{13N}t_1} + Be^{\lambda_{11C}t_2}}$$

Similarly, the proportion of ^{11}CO present in the sample at t_0 is given by:

$$\frac{Be^{\lambda_{11C}t_2}}{Ae^{\lambda_{13N}t_1} + Be^{\lambda_{11C}t_2}}$$

A more complex situation arises when two (or more) components are eluted as one peak, necessitating the use of two (or more) columns to extract the component of interest, a typical case being the analysis of a mixture of $^{13}N_2$, ^{11}CO and $^{11}CO_2$. An example of this is shown in *Figure A2.1*. As we have seen it is possible to obtain information relating to the $^{13}N_2$ and ^{11}CO components using the MS column.

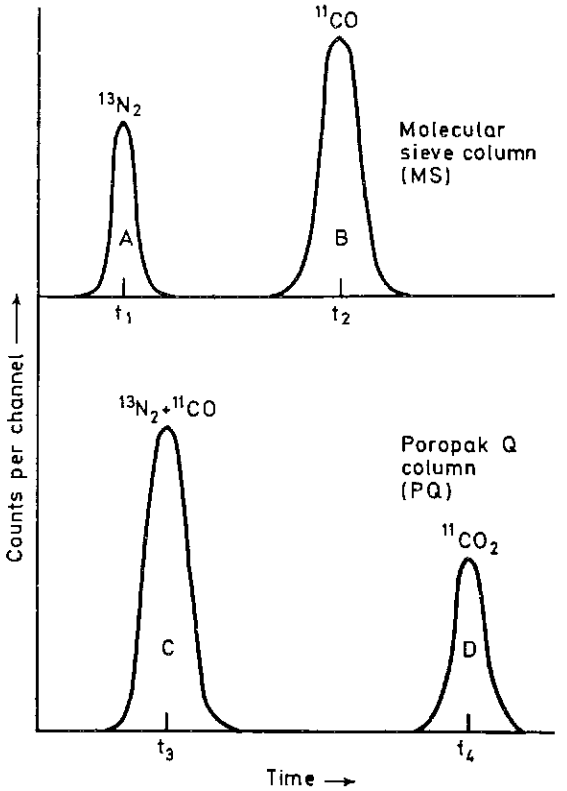

Figure A2.1 Analysis of radio-gas chromatographic data

However, since CO_2 is not eluted from a MS column under some circumstances, it is necessary to use a column containing Poropak Q (PQ) for the analysis of this component. (A column containing silica gel would also be suitable in this case.)

The measurement is made as follows. A sample is analysed for the $^{13}N_2$ and ^{11}CO content using the MS column as already described. A second gas sample is then injected into the PQ column. The $^{13}N_2$ and ^{11}CO components are first eluted as one peak (C) followed by the elution of the $^{11}CO_2$ peak (D), the times of detection being t_3 and t_4 respectively, after the time of injection (or sampling) t_0. Now to determine the proportions of $^{13}N_2$, ^{11}CO and $^{11}CO_2$ represented by peaks C and D it is clearly necessary to know the $^{13}N_2$ and ^{11}CO content of the composite peak C. Since we have already calculated the $^{13}N_2$ and ^{11}CO content of the sample at t_0 using the MS column, we can use this information to determine the ratio of these components in peak C, since we know the time t_3 between t_0 and the detection of the composite peak.

Thus the ratio of $^{13}N_2$ to ^{11}CO in peak C is:

$$\frac{Ae^{\lambda_{13N}(t_1-t_3)}}{Be^{\lambda_{11C}(t_2-t_3)}}$$

We now have information relating to all the components in the PQ gas sample at the times of detection, t_3 and t_4 of the respective peaks. To obtain the proportion of each component at t_0 it is necessary to use this information together with a knowledge of the respective decay constants. The PQ peak accumulated counts for each component, corrected to t_0 can thus be shown to be:

$$^{13}N_2 \text{ counts at } t_0 = e^{\lambda_{13N}t_3}\left[C - \frac{C}{1+\left\{\frac{Ae^{\lambda_{13N}(t_1-t_3)}}{Be^{\lambda_{11C}(t_2-t_3)}}\right\}}\right] \quad (1)$$

$$^{11}CO \text{ counts at } t_0 = e^{\lambda_{11C}t_3}\left[\frac{C}{1+\left\{\frac{Ae^{\lambda_{13N}(t_1-t_3)}}{Be^{\lambda_{11C}(t_2-t_3)}}\right\}}\right] \quad (2)$$

$$^{11}CO_2 \text{ counts at } t_0 = De^{\lambda_{11C}t_4} \quad (3)$$

where: A is the area of the $^{13}N_2$ peak (MS)
B is the area of the ^{11}CO peak (MS)
C is the area of the $^{13}N_2 + {}^{11}CO$ peak (PQ)
D is the area of the $^{11}CO_2$ peak (PQ)
} accumulated counts
λ_{13N} is the decay constant for ^{13}N (s^{-1})
λ_{11C} is the decay constant for ^{11}C (s^{-1})

t_1, t_2, t_3 and t_4 are the times of detection of peaks A, B, C and D respectively after t_0 in seconds

Thus the proportion of $^{13}N_2$ present in the sample at t_0 is given by:

$$\frac{(1)}{(1)+(2)+(3)}$$

Similarly the proportion of ^{11}CO present in the sample at t_0 is given by:

$$\frac{(2)}{(1)+(2)+(3)}$$

and the proportion of $^{11}CO_2$ present in the sample at t_0 is given by:

$$\frac{(3)}{(1)+(2)+(3)}$$

These expressions may readily be modified to take into account a greater number of components than that shown.

Appendix 3

Analysis of a Typical Gamma Ray Spectrum*

In *Figure 8.11(c)* a general method was given for determining the total accumulated counts in a gamma ray spectrum photopeak. As an example of the use of this method, the digital data corresponding to the gamma ray spectrum shown in *Figure 8.11(b)* is reproduced in *Figure A3.1*. The data corresponds to the contents of the multichannel analyser from channel 1000 to channel 1250. The peak accumulated count is indicated, in a box, for each of the four gamma rays. In the case of the 172 keV peak, suggested lower and upper levels for the summation procedure (channels 1082 and 1088 respectively) are indicated in brackets.

Thus $$N = \sum_{i=1082}^{i=1088} a_i = 98723$$

$$C = (4560+2929) \times \{(1088-1082)+1\}/2$$
$$= 26211.5$$
$$A = N - C = 98723 - 26211$$
$$= 72512 \text{ counts per 1000 s}$$
$$\text{i.e. } 72.512 \text{ counts s}^{-1} \text{ (cps)}$$

Now from *Figure 8.10* the sensitivity at 172 keV of this detector with a 1 ml source placed at 15 cm from the cryostat face is 26 cps μCiγ^{-1}.

Thus we have 72.5/26 μCiγ (172 keV) = 2.79 μCiγ (172 keV). Using the value of $P_\gamma = 26.6\%$ for the 172 keV gamma ray of ^{127}Xe, this may be converted to μCi of ^{127}Xe as follows:

$$\frac{2.79}{26.6} \times 100 = 10.49\ \mu\text{Ci}$$

or $3.7 \times 10^4 \times 10.49$ disintegrations $s^{-1} = 3.88 \times 10^5$ disintegrations s^{-1}.

* See section 8.3.5, page 280.


```
127XE.15CM.14.35HRS.1000SECS.LESS BGD
0000 001000
1000 001000 000000 000000 000000 000000 000000 000001 000000 000000 000001 000002
1010 000000 000000 000001 000003 000004 000008 000012 000068 000439 001622
1020 003590 004939 005790 005989 006238 007004 006849 006231 006279 006177
1030 006063 006015 005880 005989 006020 006156 006213 006025 006048 006120
1040 006206 005993 005831 005459 005361 005205 005410 005774 005953 006336
1050 006823 006985 007404 007675 008718 009298 008908 008423 008161 008132
1060 007804 007284 006540 005721 005154 004592 004332 004183 003975 004691
1070 007072 009588 007173 004261 003872 003820 003825 003799 003769 003961
1080 003964 004035 004560 007827 021028 034044 021765 006570 002929 002706
1090 002648 002598 002635 002664 002741 002777 002941 003256 004270 011122
1100 038700 068555 044340 009873 001381 000673 000635 000613 000623 000633
1110 000533 000520 000469 000395 000335 000317 000306 000300 000319 000329
1120 000272 000300 000218 000262 000194 000202 000198 000241 000200 000220
1130 000170 000196 000201 000149 000168 000177 000152 000122 000125 000147
1140 000149 000171 000132 000102 000126 000112 000136 000117 000117 000100
1150 000096 000114 000090 000140 000095 000110 000135 000102 000137 000092
1160 000107 000083 000125 000114 000099 000134 000127 000089 000109 000076
1170 000121 000124 000121 000093 000108 000147 000107 000113 000100 000122
1180 000123 000099 000112 000119 000115 000167 000166 000222 000412 001319
1190 004122 006469 004133 000891 000082 000013 000016 000006 999997 000004
1200 000016 000000 999997 000006 000006 000007 000009 000003 000009 000023
1210 999991 999997 999994 999993 000015 000007 999992 999998 999996 999989
1220 999997 000010 000012 000003 000002 000002 000004 000018 000003 999989
1230 999998 000000 000009 000003 000011 000004 999991 999994 000005 000006
1240 999995 000000 000001 999998 000005 000009 999994 000003 999998 999998
1250 000003
```

Figure A3.1 Multichannel analyser output data for gamma spectrum shown in *Figure 8.11(b)* (page 281)

Appendix 4

Decay Curve Analysis*

If a mixture of two independently decaying species, e.g. ^{15}O and ^{11}C is observed by a suitable radiation detector, for example a γ-ray sensitive ionization chamber, γ-ray scintillation counter or β detector, the resulting decay data obtained with respect to time will be the sum of the effects of the two separate activities.

$$A = A^{15O} + A^{11C} = \varepsilon^{15O}\lambda^{15O}N^{15O} + \varepsilon^{11C}\lambda^{11C}N^{11C}$$

where ε^{15O} and ε^{11C} are the detector efficiency factors for ^{15}O and ^{11}C respectively.

(Note: In the case of the ionization chamber and γ scintillation counter, the γ-ray output of these two nuclides being the same, $\varepsilon^{15O} = \varepsilon^{11C}$. However in the case of a β counter ε^{15O} will not necessarily be the same as ε^{11C}, since the two radionuclides have different positron (β^+) emission energies.)

If a graph is plotted of log A *versus* t for the data obtained from the decay of these two independently decaying species, a composite curve will be obtained as shown in *Figure A4.1*. It should be noted at this point that all radiation detectors have a background value that will also be added to the total response and will cause all decay curves to have a 'tail'. The value of the detector background may, of course, be determined by temporarily removing the source being measured. If this background is subtracted from the experimental data, the resulting graph of log A *versus* t should have a linear portion for large values of t (assuming data has been acquired for a sufficient length of time!). If this linear portion is extrapolated back to zero time both the intercept, A_0^{11C} and the decay constant

$$\lambda^{11C}\left(\lambda = \frac{0.693}{T_{\frac{1}{2}}}\right)$$

* See section 3.2.3, page 54.

may be determined. Now if this extrapolation is subtracted from the first portion of the background corrected curve and the resulting values replotted *versus* t, a further straight line will be found from which the intercept A_0^{15O} and decay constant

$$\lambda^{15O}\left(\lambda = \frac{0.693}{T_{\frac{1}{2}}}\right)$$

may be determined.

If the half-lives of the two components differ by less than about a

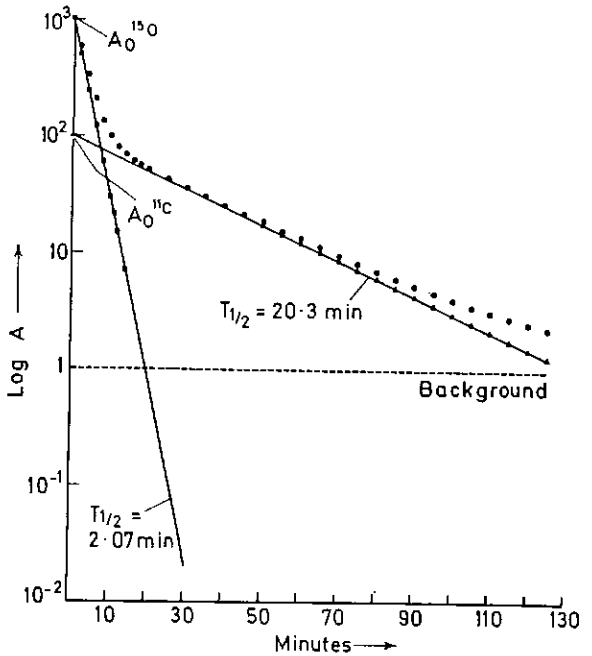

Figure A4.1 Graphical resolution of two component decay curve

factor of 2 this procedure will be found to be unsatisfactory.

The resolution of a background corrected decay curve for two species 1 and 2 of *known* but similar half-lives may be achieved by the following alternative graphical procedure.

The total activity at time t is

$$A = A_0^1 e^{-\lambda_1 t} + A_0^2 e^{-\lambda_2 t}$$

where A_0^1 and A_0^2 are the initial activity values at t_0 for species 1 and 2 respectively.

By multiplying both sides by $e^{\lambda_1 t}$ we obtain

$$Ae^{\lambda_1 t} = A_0^1 + A_0^2 e^{(\lambda_1 - \lambda_2)t}$$

$$(y = c + mx)$$

Since λ_1 and λ_2 are known and A has been measured as a function of t, if a graph of $Ae^{\lambda_1 t}$ is plotted versus $e^{(\lambda_1 - \lambda_2)t}$ a straight line should result with intercept A_0^1 and slope A_0^2.

Computer programs have been developed for decay curve analysis and it is assumed that if the reader has access to a computing facility, the assistance necessary in establishing and using such programs will be forthcoming.

Appendix 5

Measurement of a Species for Periods Comparable to its Half-Life

Sometimes it may be necessary to carry out measurements on a sample that is decaying rapidly and the measuring time becomes comparable to the half-life of the species in the sample. A useful expression that enables the counting rate A_0 at the start of such a counting time, t, to be calculated from the accumulated counts N, is derived below:

$$N = A_0 \int_0^t e^{-\lambda t} dt$$

$$= A_0 \left[\frac{e^{-\lambda t}}{-\lambda} \right]_0^t$$

$$= A_0 \left(\frac{1 - e^{-\lambda t}}{\lambda} \right)$$

Thus

$$A_0 = \frac{N\lambda}{1 - e^{-\lambda t}}$$

Appendix 6

The Preparation of Zirconium Phosphate*

Zirconium phosphate inorganic ion exchange material is prepared by the method described by Gal and Gal.† 30 g of $ZrOCl_2 . 8H_2O$ (BDH) in 300 ml of 4N HCl is added slowly, with stirring, to 500 ml of 12 per cent phosphoric acid, also in 4N HCl. When all the solution has been added the precipitate of zirconium phosphate is filtered off using a large Buchner funnel and Whatman No. 5 paper. The precipitate is washed with water (~ 1000 ml) to remove the bulk of the acid. When the pH of the precipitate is ~ 2 it is transferred to a number of petri dishes and heated at 100°C for a few hours until almost dry. Overnight air drying at room temperature is then followed by sieving to the required mesh size.

* See section 8.4.5, page 292.
† Chapter 8, reference (15).

Appendix 7

The Preparation of 5N NaOH Solution*

The preparation of this reagent requires some care, it being best carried out in a fume hood. The operative should wear protective spectacles and gloves. A large amount of heat is evolved during the dissolution of 200 grams of NaOH pellets in 1 litre of water and the adding of pellets slowly with continuous stirring is recommended. This minimizes the risk of pellets fusing into a solid mass in the bottom of the borosilicate glass beaker. It is recommended that the final solution when cool is transferred to a polyethylene bottle as glass is quite rapidly etched by this reagent, soon making it unsuitable for use.

* See section 6.3.1, page 195 and section 4.1.4, page 107.

Glossary

Absolute pressure—A pressure measured with vacuum representing zero pressure.

Alpha particle—An alpha particle is the nucleus of a helium atom.

Bombardment—The irradiation of a target with nuclear projectiles to produce a nuclear reaction.

Bourden tube gauge—A pressure gauge which uses a curved flat tube which tends to straighten under pressure indicating, by means of a needle moving over a circular scale, the value of the gas or fluid pressure.

Breakthrough—The emergence of unreacted products from a reagent tube due to depletion of the reagent or inadequate mixing.

Carrier gas—(*a*) Gas added to target material (sometimes necessary for efficient recovery) that dilutes the radioactive product resulting in reduced specific activity.

Carrier gas—(*b*) A gas used to transport the sample to be analysed through a gas chromatograph column and detector.

Collimator, for gamma rays—A defining aperture usually made from lead.

Compression joint, coupling or fitting—A tube connecting device in which the seal is made by the compression of an annular part of the fitting onto the tube.

Compton scattering—A gamma ray may give up part of its energy to an electron resulting in the gamma ray being not only degraded, but also deflected from its original path. Also known as the Compton effect.

Dead volume (traps and absorbers)—A necessary volume in which no useful chemical or other reaction takes place and where activity can be lost by decay.

Decay scheme—A schematic pictorial representation of known

nuclear facts relating to the energies of emission and abundance of particles and γ-rays for a radionuclide.

Deuteron—A deuteron is the nucleus of a deuterium atom.

Diaphragm pump—A device with a reciprocating flexible diaphragm which in conjunction with two non-return valves achieves a pumping effect.

Diaphragm valve—A valve in which the seal is maintained by a movable diaphragm.

Gamma ray emission probability-P_γ per cent—The number of gamma ray photons that will be emitted at a specified energy per 100 disintegrations of a specified radionuclide.

Gauge pressure—A pressure measured with atmospheric pressure representing zero pressure.

Half thickness—The thickness of an absorbing medium that reduces a gamma ray flux to a half of its initial value.

Helium-3—A ^{3}He particle is the nucleus of a ^{3}He atom.

Isomeric state—See metastable state.

Katharometer—A differential thermal conductivity detector for the detection of volatile compounds in the effluent of a gas chromatograph.

Inverse square law—The intensity of radiation at a given distance from a point source is inversely proportional to the square of the distance from the source.

Ionization chamber—A device filled with air or other gas fitted with internal electrodes that are suitably polarized to collect ions formed in the filling gas by the action of high energy radiation.

Isotonic solution—A solution having the same osmotic pressure as circulating body fluids.

Metastable state—An excited state of a given nucleus with a measurable life time. Also known as isomeric state.

Millimole (mM)—One thousandth part of a *mole*, which is the molecular weight of a compound in grams.

Millipore filter—A filter capable of sterilizing liquids and gases.

Molecular sieve—A highly porous dehydrated crystalline zeolite with pores of molecular dimensions and adsorbing only those molecules that are small enough to enter the pore system.

Needle valve—A valve for the fine control of gas or liquid flow rates by altering the position of a tapered needle in an orifice.

Nuclear cross section—Effective area of the nucleus of an atom presented to a bombarding particle.

'On target' yield—The rate of radionuclide production (under specified conditions and before chemical separation) as expressed for the intact target.

Partial pressure—The partial pressure of a gas in a mixture contained in a given volume is the pressure that gas would exert if it occupied the entire volume by itself.

Peristaltic pump—A pumping device that operates by sequentially squeezing and releasing a flexible tube.

Photopeak—Peak observed in gamma ray spectrum as a result of total energy absorption in the detector.

Physiological saline solution—0.9 per cent W/V solution of sodium chloride in water for injection.

Polarizing voltage—The voltage applied to the electrodes of an ionization chamber to enable the ions to be collected electrostatically.

Proton—The nucleus of a hydrogen atom.

Pyrogen—A substance supposed to exist in bacteria and to cause fever when they invade the body. Bacterical endotoxin.

Radiation chemical reaction—Chemical reaction caused by high energy radiation, e.g. x-rays, γ-rays, deuterons.

Radical (free radical)—A highly reactive species generated in chemical systems.

Radical scavenger—A substrate that reacts rapidly and preferentially with certain free radicals.

Radiolysis—Decomposition of a substance by the action of high energy radiation, e.g. x-rays, γ-rays, deuterons.

Radioisotope—Radioactive isotope or nuclide of an element. Now replaced by the term 'radionuclide'.

Radiolytic oxidation—An oxidative process brought about by high energy radiation, e.g. x-rays, gamma rays, deuterons.

Saturation (ionization chambers)—The effect produced in an ionization chamber when all the ions produced by a given amount of radiation are collected by the electrodes.

Scavenge pump—A pump for the removal of waste radioactive gas from a system, the waste gas being greatly diluted by a scavenging gas.

Scavenging gas—A gas used for the dilution of waste radioactive gas prior to its disposal.

Scintillation counter—A device for the detection of radiation; a nuclear particle or gamma ray interacts with a phosphor producing light which is then detected by a photomultiplier tube.

Sorption pump—Pumping device making use of low temperature techniques.

Specific gamma ray emission—The exposure dose rate produced by the gamma rays from a unit point source of a radionuclide. Units: Roentgens $mCi^{-1}\ h^{-1}$ at 1 cm.

Spirometer—A miniature calibrated gasometer (gas holder) used by respiratory physiologists.

Streaming (targets, furnaces, absorbers)—An undesirable effect causing inadequate mixing of two reagents in components such as targets, furnaces and absorber tubes.

Sweep gas—A gas which is used to purge the products from a target during or after an irradiation.

Sweep/target gas—A gas which serves the dual purpose of being a target material and target purging gas.

Target—Device for containing the material (gas, liquid or solid) to be bombarded.

Target gas—A gas which is the target material.

Tonometer—A glass vessel with a tap at each end used for containing gases.

Transit time—The time taken for a bolus to travel between two specified points in a gas transmission system.

Yield—An expression of the rate of production of a nuclide for defined irradiation conditions.

Useful Conversion Factors and Data

1 kg cm^{-2} = 14.2233 lb in^{-2}
or 0.96784 standard atmospheres

1 litre = 0.035316 ft^3

1 mm Hg = 0.535265 in H_2O (W.G.)

1 lb in^{-2} = 0.070307 kg cm^{-2}
or 0.06805 standard atmospheres

1 ft^3 = 28.316 litres

1 in H_2O (W.G.) = 1.86823 mm Hg

1 standard atmosphere pressure = 760 mm Hg at 0°C
or 1.0332275 kg cm^{-2}
or 14.6959 lb in^{-2}

$°C = \frac{5}{9}(°F - 32°)$

$°F = (\frac{9}{5}°C) + 32°$

Avogadro's number = 6.02252×10^{23} molecules per gram mole

Standard conditions:

Temperature	Pressure
0°C	760 mm Hg
32°F	29.92 in Hg
273°Absolute	1.000 atmospheres

Combined gas law:

$$\frac{P_1V_1}{T_1} = \frac{P_2V_2}{T_2}$$

where P_1, V_1 and T_1 are the original pressure, volume and absolute temperature of a gas, and P_2, V_2 and T_2 are the new pressure, volume and absolute temperature of the gas respectively.

Index

Absorbers, 69–70
  reagents, 69, 70
  streaming, 341
Administration of radionuclides, 120
Alpha particles, 4, 19, 338
Aluminium, targets made from, 30, 315
Amplifiers, 83–85
  direct current, 83
  vibrating reed electrometers, 84
Apparatus, testing, 320 (*see also* under Production)
Atomic mass, 3, 5
Atomic mass unit, 11
Atomic number, 2, 5
Atoms, 2

Background count rate, 110
Barium-137m, 8
Beam current, 39
Beam distribution, 39
Beam energy, selection of, 27
Beam power density, 31, 35, 41, 44
Beam power deposition, 33
Beta particles, 5, 313, 320
  absorption, 79
  decay by, 6, 7
  energy, 6
Blood,
  care in handling, 107
  labelling with ^{11}CO, 253–256
  labelling with $^{15}O_2$, 122
Blood flow studies, 122, 171, 261, 285
Blood volume estimation, 215
Boron as target material, 25, 38, 39
Boron trioxide,
  target material, as, 25
    carbon dioxide ($^{11}CO_2$) produced by, 241, 245, 246
    carbon-11 production, for, 216, 231
    stepped wedges of, 100, 101, 221, 222
Bourden tube gauge, 61, 338
Brass targets, 30, 223, 315

Caesium-137, decay scheme, 9
Carbon as target material, 25
Carbon-11, 215–260
  characteristics, 16, 217
  clinical uses, 17, 215, 217
  decay curve, 332
  organic compounds labelled with, 215
  production,
    selection of systems, 256, 257
    stepped wedges for, 100
    targets, 23, 216
  production using boron trioxide target, 221–227
    analysis, 225
    design, 221

irradiation conditions, 223
performance, 224
sweep gas, 223, 226
target efficiency, 225
yields, 223
production using nitrogen target, 218
chromatography, 220
design, 218
gas flow system, 220
irradiation conditions, 219
performance, 219
sweep gas, 219
yields, 219
storage systems, 246–253
Carbon dioxide, solid (dry ice), 316, 318
Carbon dioxide ($^{11}CO_2$), 215
production,
contaminants, 48
selection of system, 256, 257
with ^{11}CO, 244, 245
production by 'stopped flow' system, 245, 246
production using boron trioxide target, 241–244
flow diagram, 241, 242
flowmeters and filters, 243
gas transmission tubes, 243
irradiation conditions, 242
purity of product, 244
sweep gas, 242
techniques and performance, 242, 243
production using gas target, 237–241
flow diagram, 237, 239
flowmeters and filters, 239
gas transmission tubes, 240
irradiation conditions, 238
purity of product, 240
sweep gas, 238
techniques and performance, 238, 240
production using storage systems, 252
storage, 249, 250, 251
Carbon dioxide ($C^{15}O_2$), 127
production, 127, 140–145, 166
activated charcoal furnace, 143
chromatographic analysis, 134
contaminants, 141, 145
experimental, 133
flowmeters and filters, 143
gas flow system for, 130, 140, 141
gas transmission tubes, 143
increase in, 144
purity of product, 145
sweep gas, 141, 143
target for, 126, 129, 135, 141, 143
techniques and performance, 142, 144
radiation chemical properties, 134
Carbon monoxide, accidental inhalation, 317
Carbon monoxide (^{11}CO), 215, 227–237
production,
contaminants, 48
selection of system, 256, 257
with $^{11}CO_2$, 244, 245
with closed circuit, 244
production using boron trioxide target, 231–237
absorbers, 231, 232, 234, 237
contaminants, 237
flow diagram, 232
flowmeters and filters, 234
gas transmission tubes, 235
irradiation conditions, 234
purity of product, 237
scavenging gas, 233, 235
sweep gas, 234
techniques and performance, 233, 235
production using nitrogen as target, 227–231
absorbers, 227, 229, 231
flow diagram, 227, 228
flowmeters and filters, 230
gas transmission tubes, 230
irradiation conditions, 228
sweep gas, 228

techniques and performance, 230
zinc powder furnace, 229
red cell labelling with, 253–256
anticoagulants, 255
contaminants, 253
efficiency, 254
storage,
activated charcoal, with, 247
molecular sieve, with, 248
portable, 249
Carbon monoxide ($C^{15}O$),
absorber, 148
activated charcoal furnace, 148
flow diagram, 145, 146
production, 145–150
combined with $^{15}O_2$, 163
contaminants, 150
flowmeters and filters, 148
gas transmission tubes, 149
increase in, 149
purity of product, 149
sweep gas, 146
target, 146
techniques and performance, 147, 149
Cardiac output, 17
Carrier gases, 338
flow rates, 53
Cerebral blood flow, 285, 302, 303
Characteristics of radioactive gases, 16
Charcoal as reagent, 49, 67
Clinical diagnosis, short-lived radioactive gases in, 17
Clinical facilities, 108–120
administration of gas, 120
background count rate, 110
counting equipment, 112
data acquisition and recording, 110
electronic equipment, 113
fume cupboards, 104, 110
layout, 110
measurements, 120
personnel, 108
rooms, 108
scanners, 112
services, 111
standards and calibration, 118
Cobalt-57, decay, 8
Cobalt-60, decay, 8, 9
Cold traps, 70–71
design of, 102
Collimator, 113, 114, 118, 338
Combined target efficiency, 36, 224, 323
Compton scattering, 338
Connecting tubes, 102
Contaminants, 30, 46 56
atmospheric, 104
detection and measurement, 50
chromatography, 50
decay curve analysis, 54
gamma ray spectrometry, 54
mass spectrometry, 55
soluble, 55
inactive, 47
prevention, 47, 49
radioactive, 47
removal, 47, 49, 56
Conversion factors, 342
Copper in processing, 49, 67
Copper oxide in processing, 49, 67, 68
Coulomb barrier, 13
Counters and counting,
coincidence, 120
double-sided window flow proportional, 53
Geiger, 14, 113, 313
internal proportional, 50
lung scanning, in, 116, 117
recording, 117
safety precautions in use, 319
scintillation, 14, 50, 52, 53, 113, 118, 220, 313, 340
parallel counting with, 115
Curies, 11
Cyclotrons, 1, 12, 15, 19
beam current, 39
beam distribution, 40, 41, 42, 43
peak beam power density, 41, 44

Data acquisition facilities, 110
Dead volume, 338
Decay curve analysis, 54, 332

Decay scheme, 338
Dee box, 20
Detectors, 14
  contaminants, of, 50
  counters, 50 (*see also* under Counters)
  decay curve analysis, 54
  gamma ray spectrometry, 54
  katharometers, 50
  mass spectrometry, 55
  recorders, 53
  scintillation, 52, 53
  solution wash-out measurements, 55
Deuteron, 19, 339
  energy, 24, 26
  mass defect, 14
Diagnosis, short-lived radioactive gases in, 17
Diaphragm pump, 88, 164, 339
Diaphragm valves, 64, 339
Dilution of gases, 106
Dispensing, 104–108
  dilution, 106
  gases in solution, 107
  non-sterile use, 105
  sterile use, 106
  storage systems, from, 108, 248, 251, 252
Dose, personal, 105
Dosemeters, 315
Dose rates, 60
Double-sided window flow proportional counters, 53
Drikold, 316, 318

Electrometers, vibrating reed, 84
Electron capture, 7
Electronic equipment, 113
  hazards, 318
Energy,
  beam, selection of, 27
  beta particles, of, 6
  binding, 12
  deuteron, 24, 26
  gamma emission, from, 8
  practical threshold, 27
  proton, 24, 26
  release, 12
Equipment, remote control of, 85
Erythrocytes,
  damage to, 107
  labelling, 107
  ^{11}CO labelling, 253–256
    anticoagulants in, 255
    contaminants, 253
    efficiency, 254
  $^{15}O_2$ labelling, 157–163
    absorbers, 160
    closed circuit, 164
    contamination, 163
    flow diagram, 157, 158
    flowmeters and filters, 160
    gas transmission tubes, 160
    irradiation conditions, 157
    performance, 159
    radiochemical purity, 163
    sterile assembly, 161
    sweep gas, 157
    target, 157
    techniques and performance, 161
Explosion risks, 316

Facilities, (*see* Clinical facilities)
Filtration of gases, 61
Fire risks, 316
Flowmeters,
  bubble (soap film), 63
  electronic, 63
  variable area, 62
Flow rates, measurement and control, 61
Fume cupboards, 104, 110
Furnaces, 64–69
  activated charcoal, 143, 148
  copper oxide, 204
    water displacement indicator, 205
  radiation hazards, 316
  reagent tubes and reagents, 66
  safety precautions, 316, 319
  streaming, 204, 341

  temperature measurement and control, 65
  zinc powder, 229
Gamma radiation, 8
  emission probability, 339
  specific emission, 340
  spectrometry, 54, 277, 297
Gamma ray spectrum,
  analysis, 330
  photopeaks, 340
Gases,
  liquid, dangers of, 318
  solution, in, 107
  target materials, as, 23
Gas mixtures, 88–93
  continuous preparation, 92, 93
  preparation in cylinders, 89
Gas sample preparation, 277
Gas transmission tubes, 57–60, 97, 99
  radiation hazards from, 60, 315
Geiger counters, 14, 113, 313
Generators, radionuclide, 283
  krypton-81m, for, 284
  krypton-81m gas, 299–304
    flow systems, 302
    gas/liquid mixing, 300, 304
    ion exchange, 300
    spray traps and filters, 302
    krypton-81m solution, 288–299
    construction, 289
    design, 288
    efficiency estimation, 297
    loading, 292
    organic ion exchanger filled, 293
    refinements, 291
    testing, 295
  zirconium phosphate, 291, 300
Graphite, 67
  target material, as, 31, 172, 179

Half-life, 10
  measuring time comparable to, 335
Half thickness, 339
Heart studies, 17, 122, 285
Helium as sweep gas, 190, 226, 241
Helium-3, 19, 339
History of radioisotope production, 1
Hopcalite in processing, 67
Hot atom effects, 133
Hydrogen, safety precautions in use, 316
Hydrogen cyanide, 317

Internal conversion, 8
Investigation rooms, (*see* Clinical facilities)
Iodine targets, 307
Ionization chambers, 54, 78–83, 105, 339
  atmospheric pressure re-entrant, 78
  calibration of, 120, 276
  current measurement, 83
  high-pressure re-entrant, 81
  saturation, 79, 81, 340
Isomeric (metastable) state, 339
Isomers, 8
Isotope assay calibrators, 85
Isotopes, 2

Katharometers, 50, 220, 339
Krypton-79, 263–270
  characteristics, 16
  chemical purity, 270
  decay properties, 263
  dispensing, 269
  gamma ray spectrum, 262
  production, 263
  during krypton-85m production, 271
  target design, 263
  target preparation, 264
    using sodium bromide, 263
    yields, 265, 266
  quality control, 270
  radionuclidic purity, 270
  recovery from sodium bromide targets, 266
Krypton-81m,
  characteristics, 16
Krypton-81m, 283–304
  clinical applications, 285
  eluted activity tests, 295

Krypton-81m (*contd*)
gas generators, 299–304
design, 289
flow systems, 302
gas/liquid mixing, 300, 304
ion exchange, 300
spray traps and filters, 302
half-life, 283, 285, 297
parent/daughter relationship, 283
solution generators, 288–299
construction, 289
design, 288
efficiency estimation, 297
loading, 292
organic ion exchanger filled, 293
preparation, 291
refinements, 291
testing, 295
Krypton-83m, 288
Krypton-85m, 261, 270–283
characteristics, 16
data acquisition and processing, 280
decay properties, 270, 271
dispensing, 274, 276
impurities, with, 277
energy calibration, 279
gamma ray spectrum, 278
gas sample preparation, 277
production, 29, 271
chemical aspects, 282
contaminants, 48
recovery, 273
targets for, 22, 23, 272
yields, 272
quality control, 277

Krypton-87, contaminating krypton-85m, 277

Leaks, 319
Lithium bromide as target material, 265
Lung function studies, 17, 122, 171, 215, 285
counting systems, 116, 117

Manometers, 61
Mass defect, 12, 14
Mass spectrometry, 55
Maximum external beam current, 39
Maximum permissible doses, 313, 314
Maximum working pressure, factors, 59
Measuring cylinders, 75
Measuring spirals, 73, 74, 81, 83
Millipore filters, 105, 106, 339
Molecular sieve, 339
Multichannel analysers, 54
Myocardial blood flow, 17, 122

Needle valves, 64, 339
Nessler test, 56
Neutrons, 3
Nitrogen-13, 171–214
characteristics, 16, 172
clinical uses, 17, 171, 172
decay, 171
half-life, 171, 172
production,
choice of method, 211
chromatography, 177
contaminant, 177
CO_2 gas target, 176, 178, 179, 186, 191–200
performance, 174
rate, 179
sweep gas, 177
targets, 23, 173, 174, 179, 187
target performance, 174, 177, 182, 190
yield, 212
production using activated charcoal target, 187–191, 208–211
absorbers, 210
design, 187
flow diagram, 208, 209
flowmeters and filters, 210
gas transmission tubes, 210
irradiation conditions, 210
operational characteristics, 190
pressure, 188
purity, 211

radiochemical purity, 190, 211
sweep gas, 189, 190, 208, 210
techniques and performance, 190, 209, 211
production using gas target, 191–200
chromatographic analysis, 200
contamination, 191, 199
copper spiral traps, 194
flow diagram, 191, 192
flowmeters and filters, 194
gas transmission tubes, 194
increase of rate, 198
irradiation conditions, 194
performance, 193
pressure, 197, 198
quality control, 199
rate of absorption, 198
solution, 198
sterile assembly, 195
sweep gas, 191, 194
techniques and performance, 196
production using graphite target, 179–187, 200–208
beam entry window, 183
chromatographic analysis, 183, 207
contamination, 184
copper oxide furnaces, 204
copper spiral traps, 203
design, 179, 181
flow diagram, 201, 203
flowmeters and filters, 203
gas transmission tubes, 204
irradiation conditions, 203
operational characteristics, 186
quality control, 207
rate of, 184
sterile assembly, 205, 206
sweep gas, 181, 182, 200, 203
techniques and performance, 182, 202, 206
yield, 182, 206
saline solutions, 107
solution, in, 173, 199, 211
specific activity, 179
tracer, as, 171
Nitrogen oxides, dangers of, 317, 318
Nuclear physics, 2–11
Nuclear reactions, 14, 19
table of, 20
Nuclear reactors, 1, 13
Nucleus, disintegration of, 4
Nuclides and isotopes, 2, 4

Organic compounds, ^{11}C labelled, 215
Oxygen-15, 122–170
characteristics, 16, 124
clinical uses, 17, 122, 124
decay scheme, 7, 123
gas transmission, 125
half-life, 122
$^{15}O_2$ production, 127, 136–140
absorbers, 137
closed circuit, 164, 165
combined with carbon monoxide ($C^{15}O$), 163
combined with labelling, 163
comparative performance of systems, 167
continuous, 136
experimental, 127
flowmeters and filters, 137
gas flow system, 130, 131, 136, 137
gas transmission tubes, 139
increased rate, 139
'on line', 122
performance, 138
purity of, 140
selection of system, 166
sweep gas, 128, 132, 137
sweep/target gases, 127
targets, 23, 123–127, 128, 132, 133, 137
techniques and system performance, 139
yields, 127
red cell labelling system, 157–163
absorbers, 160
closed circuit, 164
contamination, 163
flow diagram, 157, 158

$^{15}O_2$ production (*contd*)
red cell labelling system (*contd*)
flowmeters and filters, 160
gas transmission tubes, 160
irradiation conditions, 157
performance, 159
radiochemical purity, 163
sterile assembly, 161
sweep gas, 157
target, 157
techniques and performance, 161
specific activity, 72, 161, 162
Ozone, inhalation, 318

Peristaltic pump, 92, 164, 291, 340
Personnel, 108
safety, 105
Photopeaks of gamma ray spectrum, 340
Polytetrafluoroethylene, transmission tubes made from, 59
Positron emitters, yield measurement, 74
Pressure, measurement and control, 61
Production of radionuclides, 11–14, 19, 20 (*see also* under specific nuclides)
absorbers, 69
amplifiers, 83–85
boron trioxide stepped wedges, 100
cold traps, 70–71
contaminants, 46
detection and measurement, 50
continuous flow systems, 106
communication with investigation room, 111
design of systems, 93–102
dose rates, 60
filtration, 61
furnaces, 64
gas pressure and flow rate, 61
gas tube connections, 97, 99, 102
ionization chambers, 78, (*see also* Ionization chambers)
isotope assay calibrators, 85
joining metal tubes, 96, 97, 99
pressure and flow measurement and control, 61
pumps, 98
reagents, 49
remote control of equipment, 85
systems, 57, 58
taps and valves, 64, 94, 95, 102
targets for, 20–39, (*see also* under Targets)
transit time, 59
transmission, 56
tubes and connections, 57, 59, 94, 99, 125
vacuum connectors, 96
waste gas disposal, 86
yields, (*see* Yields)
Protons, 19
energy, 24, 26
Pumps, 98
Pyroneg, 291, 293

Radiation,
maximum permissible dose, 313
measurement, 313
Radiation hazards, 313–316
Radioactive concentration, 71
Radioactive decay, 4, 10
scheme, 6, 7
Radioactive specific activity, 71
Radioactive tracers, 14
Radioactivity, 4
Radiocardiography, 18, 285
Radio-gas chromatography, 50
apparatus, 51
of radioactive gases having short half-life, 326
Radioisotopes, 4
Radiolysis, 23, 132, 200, 340
Radiolytic oxidation, 133, 219, 340
Radionuclides, 4
Rare gases, clinical applications, 261
Rare gases, radionuclides of, 261–312, (*see also* under specific gases)
Reagents, 49, 66
absorption, in, 69
contaminant removal by, 56
tubes, 66

used, 67
Recorders, 53, 117
ultra-violet, 117
Red blood cells, (*see* Erythrocytes)
Respiratory physiology, equipment for, 118
Rotameters, 62
Rubidium-79, 288
Rubidium-81,
gamma ray spectrum, 287
leakage, 296
parent for krypton-81m, as, 283, 299
production, 283
recovery, 288
target system, 286
Rubidium-83, 288

Safety precautions, 313–322
chemical hazards, 316–318
electrical hazards, 318
eyes, 105
fire and explosions, 316
furnaces, 319
gas generators, 300
inhalation of toxic gases, 317
krypton-79 production, in, 265
leak testing, 319
liquid gases and low temperature solutions, 318
mechanical hazards, 319
personal, 105
radiation hazards, 313–316
remote control and, 86
target handling, 315
Saltzman test, 56
Scavenge pumps, 57, 86, 87, 340
radiation hazards, 316
Scavenging gas, 233, 340
tanks, 57, 87
Scintillation counters, 113, 118, 313, 340
parallel counting with, 115
Selection of gases, 15
Silica gel as absorbant, 70
Sodium bromide as target, 263, 286
Sodium hydroxide solution, preparation of, 337
Sodium iodide crystals in scintillation counters, 53, 113
Sodium iodide targets, xenon-127 production with, 307
Solenoid valves, 85
Solution, gases in, 107
Solution wash-out measurements, 55
Sorption pump, 29, 340
Specific activity, 71
Spectrometers, calibrated gamma ray, 277
Spirometers, 118, 341
Storage systems, dispensing from, 108
Streaming, 28, 65, 204, 341
Sweep gases, 21, 88–93, 341
continuous preparation, 92, 93
preparation of mixtures, 89
safety precautions, 316
Syringes, 104

Taps and valves, 94, 95
cold traps, of, 102
testing, 320
Targets for gas production, 13, 20–39, 341
activated charcoal for nitrogen-13 production, 187–191, 208, 210
aluminium, 30, 315
beam power deposition, 31, 33
boron, 25, 38, 39
boron trioxide,
carbon dioxide ($^{11}CO_2$) production by, 241, 245, 246
carbon monoxide (^{11}CO) production with, 231
carbon-11 production, for, 216, 221–227
efficiency, 224, 225
brass, 30, 315
carbon, 25
carbon dioxide ($C^{15}O_2$) production, for, 129, 143
carbon monoxide ($C^{15}O$) production, for, 146
combined efficiency, 36, 224, 323
construction of, 21
continuous flow, 27

Targets for gas production (*contd*)
cooling, 31
design factors, 21, 22
dissolvers, 266, 267, 268
efficiency, 35, 323
gas materials, 36
solid materials, 37
enriched gases as, 23
foil windows, 34, 35
gas removal from, 27, 29
gas tightness, 31
gases, 23, 36
graphite, 31
$^{13}N_2$ production, for, 175, 179–187, 200, 203
$H_2{}^{15}O$ production, for, 152, 153
iodine, 307
krypton-79, for, 263
krypton-85m, for, 272
leak testing, 320
lithium bromide, 265
materials, 22, 32
nitrogen,
carbon dioxide ($^{11}CO_2$) production, for, 237
carbon monoxide (^{11}CO) production, for, 227
carbon-11 production, for, 216, 218, 219
nitrogen-13 production, for, 191, 194, 198
oxygen-15, for, 123–127, 132, 133, 134, 135, 137
purity of, 25
purpose of, 21
recovery of gas from, 27
red cell $^{15}O_2$ labelling, for, 157
rubidium-81 production, for, 286
safety precautions, 315
sodium bromide,
krypton-79 production, for, 263
recovery of krypton-79 from, 266
rubidium-81 production, for, 286
solids, 25, 37
storage, 315
streaming, 341
temperature, 28
uranium-235, 305
wedge, 221, 222
windows, 30
yields, 28
Thermoluminescent dosemeters, 315
Tonometer, 253, 341
Total activity, 105
Toxic gases, inhalation of, 317
Transit times, 59
Transmission of gases, 56–61
filters, 61
protective installation, 59
tubes for, 57, 59
Tritium, decay, 6
Tubes and connections in apparatus, 94–99

Units, 11
Uranium-235 targets, 305
Use of gases, (*see also* Clinical facilities)
factors, 14

Valves, 64, 94
Van de Graaff accelerators, 2, 12, 19
Ventilation in investigation rooms, 110
Vibrating reed electrometers, 84

Waste gas disposal, 86–88
Water ($H_2{}^{15}O$), production, 150 157
absorbers, 154
catalyst and bubbling chamber, 155
contaminants, 150, 156
flow diagram, 150, 151
flowmeters and filters, 154
gas transmission tubes, 154
hydrogen supply, 153
scavenging gas, 153
sweep gas, 153
target, 153
techniques and performance, 152, 155
quality control, 156

Xenon-127,
characteristics, 16
decay properties, 305, 306
dispensing, 309
gamma ray spectrum, 281, 282
production of, 29, 307
recovery from target, 309
sodium iodide target, 307
yields, 307, 308
quality control, 309
Xenon-133, 15, 261, 305
characteristics, 16
collimators, 114
dispensing, 107, 108
measurement, 79
scanners for, 113
solutions, 107
Xenon-135, 305
characteristics, 16
decay properties, 305, 306
production, 305

Yield, 339, 341, (*see also* under specific radionuclides)
measurements,
batch-wise, 78
calibration, 78
continuous, 73
gas splitting in, 76, 77
'on flow', 74
spirals, 81, 83
using cylinders, 75
using spirals, 73

Zinc in processing, 67, 68
Zirconium phosphate generators, 291, 300
Zirconium phosphate, preparation, 336