Session VI

Reports from the Laboratories

Moderators: G. Bidas, S.-J. Heselius

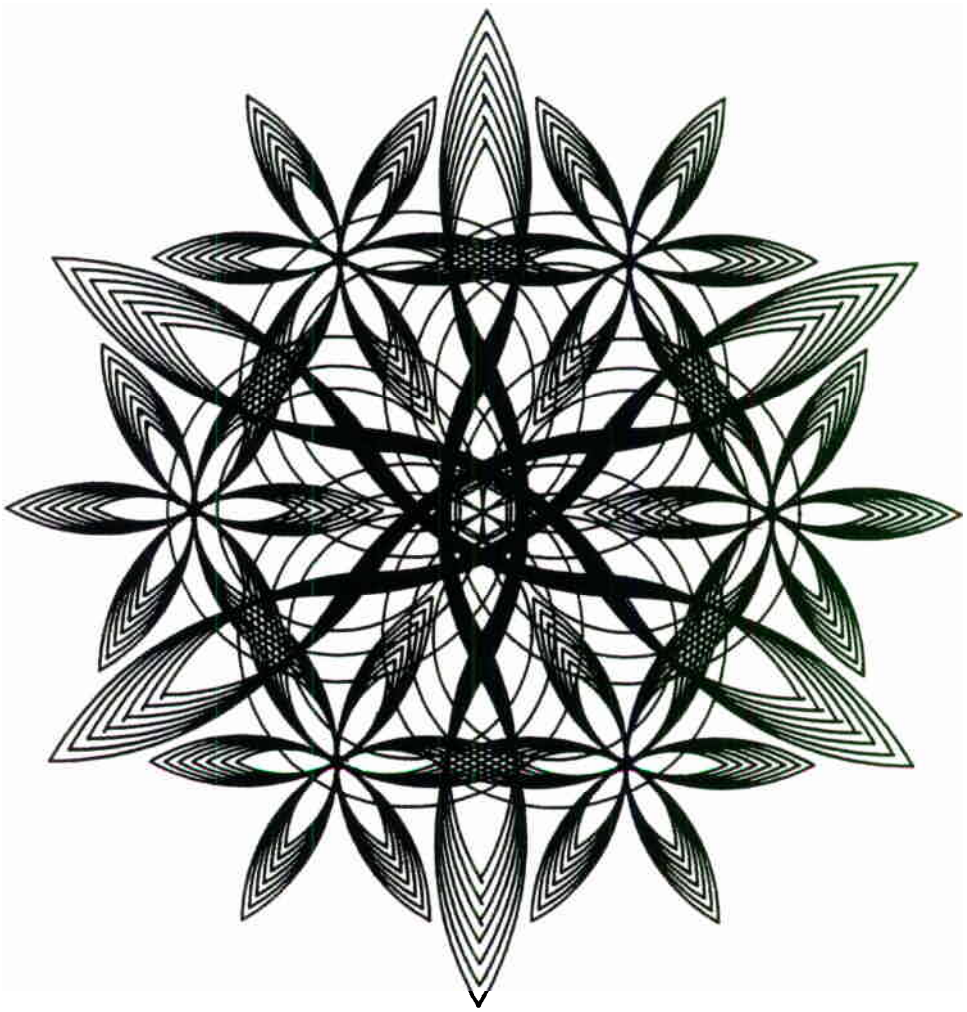

The life span of a one dollar bill is about eighteen months.

PET - Radiopharmaceutical facilities at Washington University Medical School - An overview

Carmen S. Dence and Michael J. Welch
Mallinckrodt Institute of Radiology, Washington University
Medical School, 510 So. Kingshighway, St. Louis, MO 63110

INTRODUCTION

The PET program at Washington University has evolved over more than three decades of research and development in the use of positron-emitting isotopes in medicine and biology. In 1962 the installation of the first hospital cyclotron in the USA was accomplished. This first machine was an Allis Chalmers (AC) cyclotron and it was operated until July, 1990. Simultaneously with this cyclotron we also ran a Cyclotron Corporation (TCC) CS-15 cyclotron that was purchased in 1977. Both of these cyclotrons were maintained in-house and operated with a relatively small downtime (approximately 3.5%). After the dismantling of the AC machine in 1990, a Japanese Steel Works 16/8 (JSW-16/8) cyclotron was installed in the vault. Whereas the AC cyclotron could only accelerate deuterons (6.2 MeV), the JSW - 16/8 machine can accelerate both protons and deuterons, so all of the radiopharmaceuticals can be produced on either of the two presently owned accelerators.

At the end of May 1993, the medical school installed the first clinical Tandem Cascade Accelerator (TCA) a collaboration with Science Research Laboratories (SRL) of Somerville, MA. Preliminary target testing, design and development are presently under way. In 1973, the University installed the first operational PETT device in the country, and at present there is a large basic science and clinical research program involving more than a hundred staff in nuclear medicine, radiation sciences, neurology, neurosurgery, psychiatry, cardiology, pulmonary medicine, oncology, and surgery. A summary of the personnel involved in our PET programs is presented in Tables 1 and 2.

Table 1
Personnel Involved in Radiopharmaceutical Production Work at Washington University PETT Center

Rank	No	Routine		Research	
Faculty	7	2	8	5	15.5
Post-Docs	3	1		2	
Technicians	7.5	4		3.5	
Grad. Students	6	1		5	
Cyclotron Operators	2				
Part-time Cycl Oper	2				
Computer Support	0.5				
Administrative Support	3				
Total	31				

Table 2
PETT User Groups at Washington University Medical School

	Neurology	Cardiology	Pulmonary	Nuclear Med.	Total
Head	M.E. Raichle	B. Sobel/ S. Bergmann	D.P. Schuster	B. Siegel	
Faculty	8	2	2	4	16
Residents	3	6	3	2	14
Technicians	15	10	2	3	30
Students	3	5	3	-	11

Radiopharmaceutical Production

The accelerator-based production of radiopharmaceuticals is presented in the flow chart of Fig 1. After isotope production with the designated machine, the isotope processing is accomplished by either robotic or remotely operated systems. The advantages of robotics for radiopharmaceutical production are given in Table 3.

Table 3
Advantages of Robotics in the Routine Production of PETT Radiopharmaceuticals

Flexibility:

1. Multi-synthetic capabilities
2. Ability to easily change synthetic processes
3. Improvements in system can be carried out in steps without interfering with existing system

Intelligence:

1. Monitoring capabilities allow system to carry out synthesis and quality control
2. Ability to detect problems during syntheses
   a) Gives advance warning of failure.
   b) In most circumstances allows corrective actions to be taken.
3. Graphic interface in windows environment
   Make system user friendly

Quality control prior to or post injection, depending on the half life of the isotope, is accomplished with the multiple instrumentation summarized also in Fig 1. These are all dedicated systems with built-in flexibility to rapidly change conditions for fast and accurate analysis of diverse radiopharmaceuticals. A flow chart of the our non-cyclotron radiopharmaceutical production is illustrated in Fig 2. In this case generators or reactor produced isotopes are routinely processed by robotic or remotely operated systems followed by the appropriate quality control. After administration to patient or animal subject the fate of the final product is monitored by any one of the four PETT instruments currently in use.

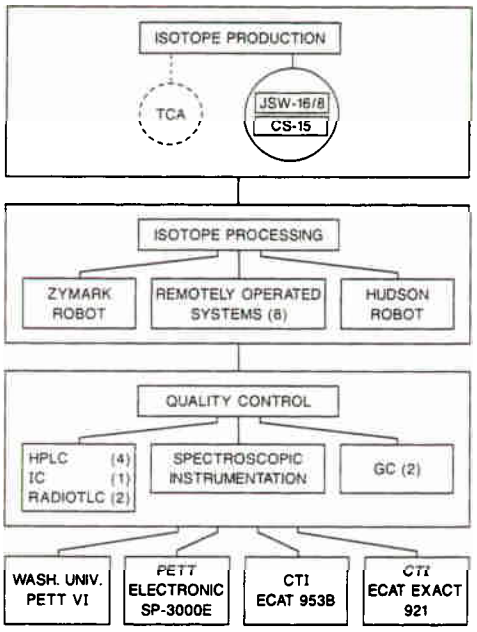

Figure 1. Cyclotron-based radiopharmaceutical production at Washington University PETT Center.

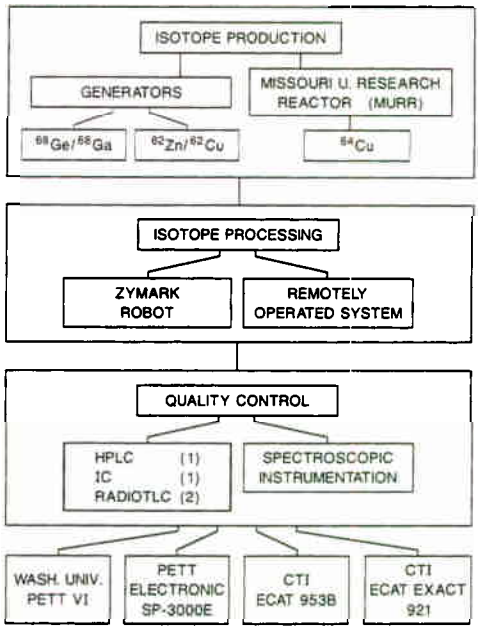

Figure 2. Non-cyclotron based radiopharmaceutical production at Washington University PETT Center.

A typical scheduled day for cyclotron isotope production is given in Table 4. This heavy production load is reflected in the average weekly rate of radiopharmaceuticals delivered for studies during the year 1992, which is illustrated in Table 5. During that year a total of 445 patients and nearly 380 animal studies were undertaken (see Table 6). Notice that these are absolute number of patients or animals and that multiple studies will usually be performed in one subject.

Table 4
Typical Production Schedule Involving the Two Cyclotrons at Washington University

Time	JSW - 16/8	TCC-CS-15
7:00 - 7:30	warm-up	
7:30 - 9:00	^{18}F production (FDG/FES)	
9:00 - 9:30		Warm-up
9:30 -11:00	^{18}F production (F-MISO, other)	^{15}O-Production (H_2O, CO, O_2)
11:00 -11:30	Target change	
11:30 -12:00	^{11}C-Production (C-1-Glucose)	^{15}O-Production (H_2O, CO, O_2)
1:00 - 1:30	Target Change	Target Change
1:30 - 2:30	^{15}O-Production (H_2O, CO, O_2)	^{11}C-Production (CH_3I, acetate)
4:00 - 6:00		^{15}O-Production (H_2O, CO)

Table 5
Production Runs During the Year 1992 at Washington University PETT Center

	No. of Runs	Weekly Rate
$C^{15}O$	342	30.9
$O^{15}O$	318	
$H_2{}^{15}O$	1374	
^{15}O-Butanol	234	
^{11}C-Glucose	40	7.5
^{11}C-Palmitate	29	
^{11}C-Acetate	109	
Other ^{11}C-Cmpds	211	
^{18}F-Benperidol	22	4.5
^{18}F-Spiperone	12	
^{18}F-Estradiol	47	
^{18}F-FDG	107	
^{18}F-MISO	15	
^{18}F-Captopril	18	
Other ^{18}F Cmpds	15	
^{68}Ga-Citrate	199	3.8
^{62}Cu-PTSM	28	1.65
^{64}Cu-antibodies	58	
$^{13}NH_3$	17	0.33

Table 6
Overall Distribution of Production Runs During the Year 1992 at Washington University PETT Center

	Patients	Dogs	Monkeys	Rats	Phantoms	Chem	QC
JSW-16/8	184	22	54	29	32	255	-
CS-15	211	102	80	-	47	35	57
^{68}Ga	16	82	-	-	19	56	26
$^{62}Cu, ^{64}Cu$	34	-	-	8	-	67	40
Total	445	206	134	37	98	413	123

In-house Tomographic Machines

PETT VI

Built by Washington University in 1980, this tomograph was designed for studies of the brain. Its detectors are Cesium Fluoride, a relatively fast scintillation material, and its design has a high intrinsic efficiency making it ideally suited to studies of blood flow using ^{15}O-H_2O. Currently PETT VI is a dedicated animal tomograph utilized for myocardial and pulmonary investigations as well as for the evaluation of new radiopharmaceuticals.

SP-3000E

Whole body tomograph designed and built by PETT Electronics Inc., St. Louis, MO in 1991. Detector array consists of Cesium Fluoride crystals individually coupled to small PMT's, a configuration suited to the high count rates encountered in investigations of myocardial perfusion with ^{15}O-H_2O and ^{15}O-CO. The 3000E is used for clinical and research investigations of human myocardial viability.

ECAT 953B

Brain tomograph built by CTI PET systems, Knoxville, TN and installed in 1992. This system features 2 rings of modular Bismuth Germanate (BGO) detectors and retractable septa to allow volumetric data collection and image reconstruction. The 953B is used primarily for research investigations of cerebral blood flow in humans and baboons. It is also used to study cerebral glucose metabolism and neuroreceptors.

ECAT EXACT 921

Installed in 1992, this was the first of an extended axis tomograph design from CTI and is now a very popular tomograph among clinical PET sites. This system uses 3 rings of BGO detector modules to provide an extended axial field of view for more rapid acquisition of events over the whole patient. Its workload is split between research and clinical studies of oncology and cardiology patients. Tracers include ^{18}F-FDG, ^{18}F-estradiol, ^{11}C-acetate, ^{15}O-H_2O, ^{15}O-CO, ^{64}Cu-antibodies and ^{68}Ga-citrates.

Radioisotope Production at JYFL Accelerator Laboratory in Finland

J. Kumpulainen and J. Hiltunen
MAP Medical Technologies Inc
Elementtitie 27
FIN-41160 Tikkakoski, Finland

J. Äystö, R. Julin, E. Liukkonen, V. Nieminen and T. Poikolainen
Accelerator Laboratory, University of Jyväskylä,
P.O. Box 35
FIN-40351 Jyväskylä, Finland

Introduction

MAP Medical Technologies Inc. is a private, research oriented high-tech company, which produces radiopharmaceuticals for both diagnostic and therapeutical purposes. MAP has one nuclear reactor and one high-energy cyclotron at it's disposal for research and production. The new production plant was completed in 1992, which was specially designed to fulfil the highest new requirements and standards for production and products.

High-energy machines, like the new K130-cyclotron in the University of Jyväskylä, have a great potential for producing some special radioisotopes. Thus a solid target station for radioisotope production was planned into the new accelerator laboratory in collaboration between the Department of Physics (JYFL) and MAP. The target station is designed for high-energy intensive light-ion beams delivered from the K130-cyclotron.

Accelerator

The accelerator laboratory has a Scanditronix K130 cyclotron equipped with an external ECR ion source [1]. It can produce light and heavy ions with variable energy, e.g. protons up to the energy of 90 MeV and heavy ions up to the energy of about 30 MeV/u. The first external beam was taken at January 1992. The experimental hall became ready at June 1992, and the construction of the first caves was finished at fall 1992. The proton beam into the radioisotope production facility was taken at April 1993, for the first time. The project for getting a separate light ion source has been started.

Radioisotope production facility

Main features of the station are somewhat similar to radioisotope production facilities at TRIUMF or NAC [2,3].The irradiation facility is situated in the first cave of the experimental hall, and Fig. 1 shows the general lay-out of the facility. The aluminium target chamber is surrounded with local radiation shields. One part is fixed to the concrete front wall, and the other part is moving on rails. The moving part is illustrated in fig. 2. The neutron shields are consisting of an inner layer of 30 - 40 cm iron, and of an outer layer of about 20 cm paraffin wax mixed with 3 % of boron carbide. Via nonelastic interactions in the iron, fast neutrons are degraded to intermediate energies. Those are thermalized in paraffin through elastic scattering on the hydrogen nuclei. Boron is used to absorb thermalized neutrons. The fixed shield has additionally a Pb layer of 3 cm towards the cyclotron. The lead (plus also the iron) layer is a gamma-ray shield for the beam line components and personnel working during maintenance in the front cave. The design of the radiation shield has been following the outline of ref. [3].

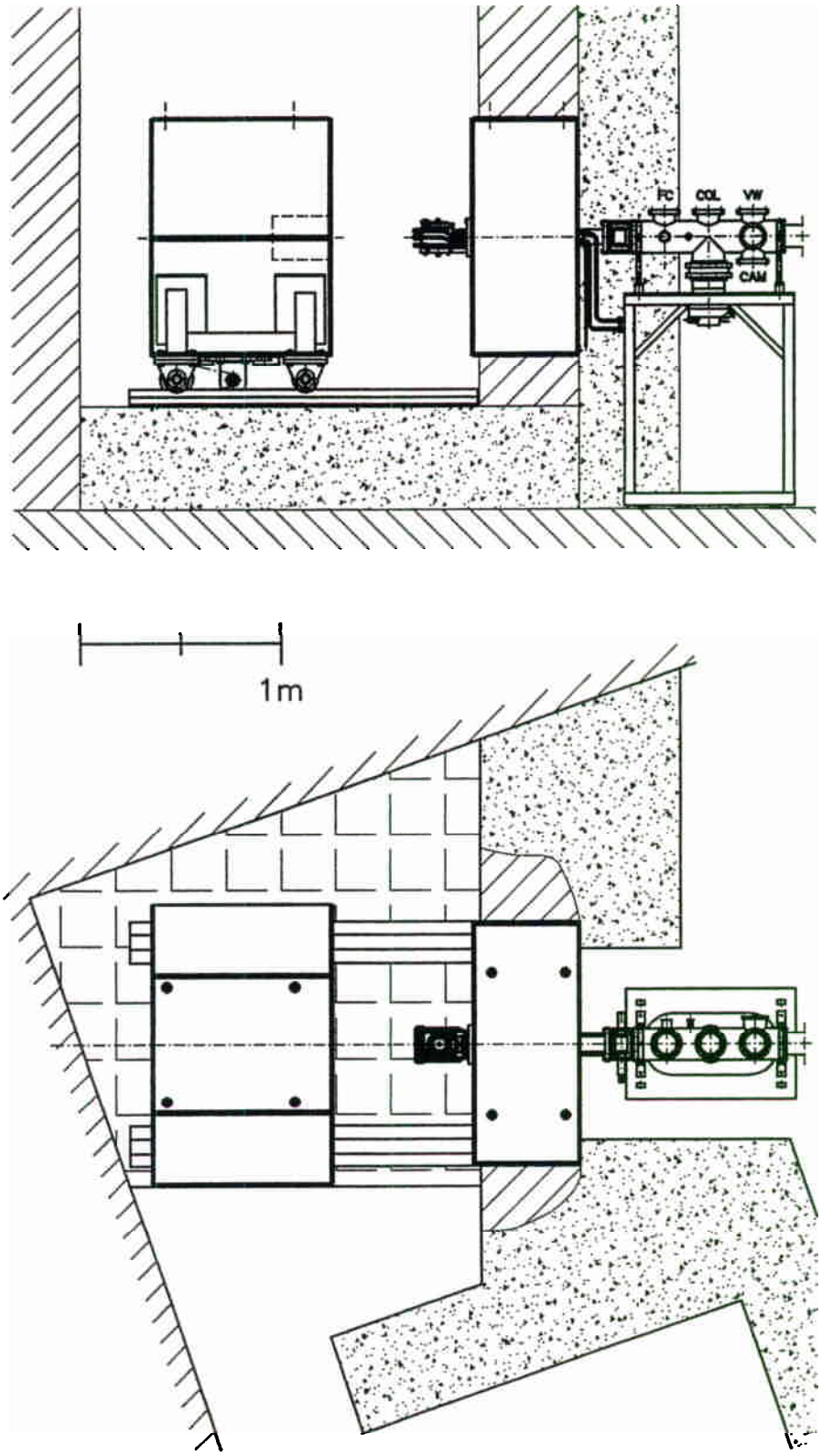

Fig. 1 The general view of the target station with the local radiation shield open. On the right just in front of the fixed shield is the beam diagnostics chamber.

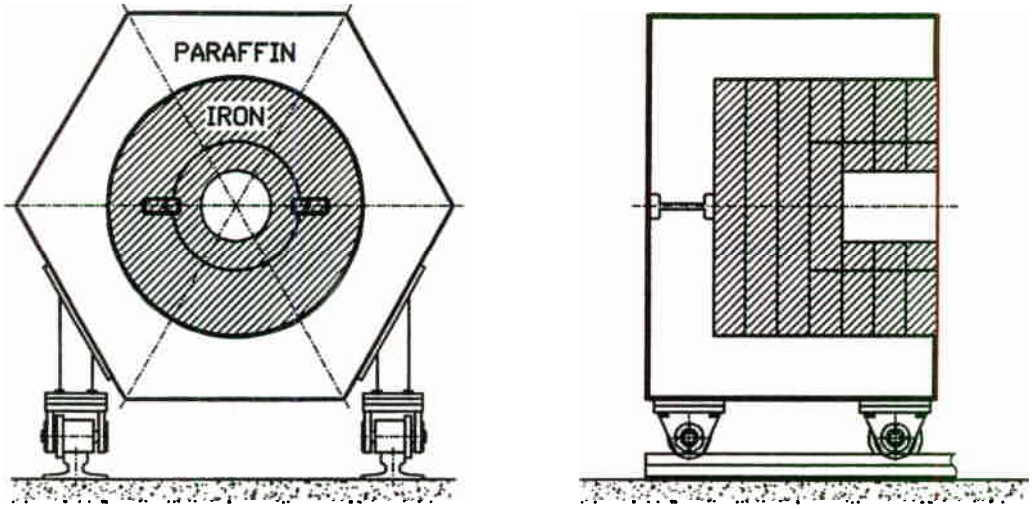

Fig. 2 The radiation shield part which is movable on rails. The inner iron layer has a thickness of 30 cm radially and of 40 cm in the forward direction. The paraffin layer of 20 cm contains about 3 % of B_4C.

The target material is closed in a stainless steel cassette, which is water cooled from all sides. The water bath is also used as a beam stop. There is a separate closed circuit cooling system. It consist of a 15 kW heat exchanger, a pump, a 10 µm filter, and a branch circuit which recycles about 2 % of the target water flow through a mixed bed ion exchange resin. The water flow is 15 - 30 l/min. Water conductivity, temperature and pressure are measured in the inlet and the outlet of the target cooling water. Water conductivity is used for monitoring the condition of a target and the ion exchange resin.

The target transfer system is realized with one moving arm, which is remotely driven via pneumatical cylinders. It is taking the target cassette into the irradiation chamber and from the irradiation chamber into the lead box. In the lead box target is moved to Tikkakoski, where the targets are processed in the new laboratory site of MAP.

Present program

Our first goal is the production of a radioisotope ^{82}Sr via the $^{85}Rb(p,4n)$ reaction. We are using about 75 MeV proton beam and a 3-4 g/cm^2 thick metallic natural Rb target. The energy loss in the target material is from 68 MeV to about 45 MeV. The radioisotope ^{82}Sr ($T_{1/2}$ = 25.5 d) is a parent nucleus for short-lived ^{82}Rb ($T_{1/2}$ = 76 s), which is a positron emitter, and mainly needed for heart and brain studies with PET.

With our facility we are also starting the production of ^{123}I with the $^{127}I(p,5n)^{123}Xe$ -> ^{123}I reaction and 75 MeV proton beam. The radioisotope ^{123}I is mainly used for labelling products for thyroid diagnosis.

The proton beam development for our purposes is going on. The irradiation facility has been tested and is fully operational at the end of this year.

References

[1] E. Liukkonen, 13th Int. Conf. on Cyclotrons and their Applications, Vancouver, July 6-10, 1992.

[2] D. R. Pearce and J. S. Vincent, 13th Int. Conf. on Cyclotrons and their Applications, Vancouver, July 6-10, 1992.

[3] G. F. Steyn, T. J. van Rooyen, P. J. Binns, J. H. Hough, F. M. Nortier and S. J. Mills, Nucl Instr. Meth. **A316** (1992) 128.

A New Radioisotope-Production Research Facility Utilizing Ion Beams from AVF Cyclotron

T. Sekine, M. Izumo,* H. Matsuoka, K. Kobayashi,* N. Shigeta, A. Osa, M. Koizumi, S. Motoishi,* K. Hashimoto,* Y. Hatsukawa,* F. Miura,* T. Sorita,* T. Moriya,* H. Kudo* and H. Umezawa*1

*Department of Radioisotopes, Japan Atomic Energy Research Institute, 1233 Watanuki, Takasaki 370-12 and *Tokai-mura, Ibaraki 319-11, Japan*

H. Watanabe

Department of Advanced Radiation Technology, Japan Atomic Energy Research Institute, 1233 Watanuki, Takasaki 370-12, Japan

INTRODUCTION

At the Takasaki-site of JAERI, an AVF cyclotron has been constructed for advanced radiation technology research. From the cyclotron equipped with a multicusp ion source and ECR ion sources, beams of light ions and heavy ions are available for production of a broad range of radioisotopes. A radioisotope production facility utilizing these ion beams has been constructed for research and development of potentially useful radioisotopes.

At the Tokai site, JAERI has nuclear reactors and a tandem acclerator. Using the reactors, JAERI has established production techniques of varieous radioisotopes and supplied products across Japan for medical, industrial and scientific use. As to isotopes to be produced by charged-particle reactions, production methods have been developed for isotopes such as ^{95m}Tc and ^{237}Pu which are used as tracer in research of the technetium and plutonium behavior in the nuclear fuel cycle and the environment[1,2].

At the Takasaki site, production methods will be developed for potentially useful radioisotopes mainly in medicine and life science. For this purpose, solid, gas and liquids targets must be irradiated and chemically processed to produce the isotopes of light and heavy elements and their labelled compounds.

The Takasaki facility consists of an irradiation apparatus, a solid-target transfer system, shielded cells for solid target and shielded

Table 1 Characteristics of the TIARA/JAERI AVF cyclotron[3].
(M: mass number, Q: electric charge)

Cyclotron		
Machine model:		Sumitomo Heavy Industries 930
K-number:		110
Extraction radius:		923 mm
Number of sectors:		4
Number of dees:		2
Dee angle:		86 degrees
Maximum dee voltage:		60 kV
Rf range:		10.6 - 22 MHz
Resonator:		Moving short type
Harmonic number:		1, 2, 3
Range of M/Q:		1 - 6.5
Ion source and injection		
Injection:		Axial injection
Light-ion source:		Multi-cusp type
Heavy-ion source:		ECR type (OCTOPUS)
Range of acceleration energy		
H^+		5 - 90 MeV
D^+		5 - 53 MeV
He^{2+}		10 - 108 MeV
Heavy ions	min.	2.5 M MeV
	max.	110 Q^2/M MeV
Extraction beam current		
H^+	90 MeV	10 eμA
	45 MeV	30 eμA
D^+	50 MeV	20 eμA
He^{2+}	100 MeV	10 eμA
	50 MeV	20 eμA
Ar^{8+}	175 MeV	3 eμA
Ar^{13+}	460 MeV	30 enA
Kr^{20+}	520 MeV	10 enA

Present address: Japan Radioisotope Association, 2-28-45 Honkomagome, Bunkyo-ku, Tokyo 113, Japan

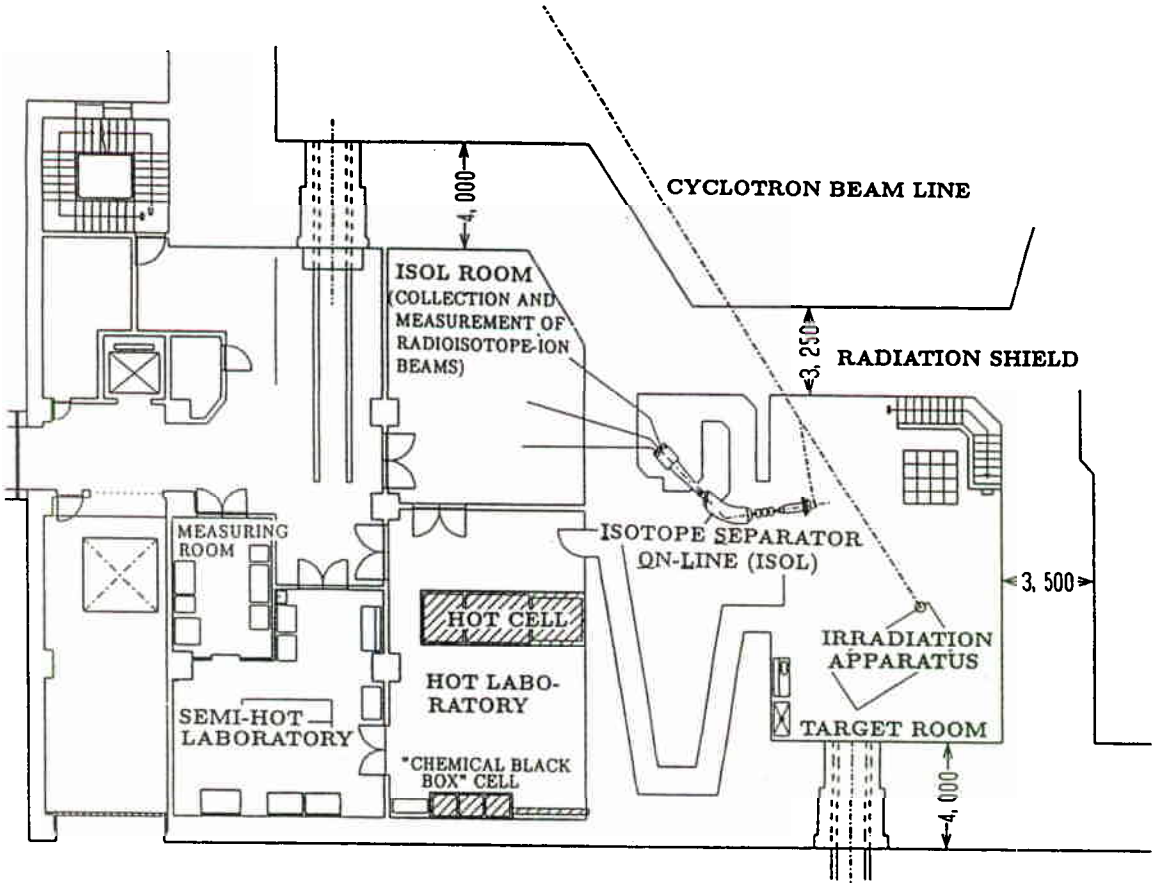

Fig.1 The radioisotope production facility in TIARA/JAERI utilizing ion beams from AVF cyclotron.

cells for labelled-compound synthesis with gas and liquid targets. For chemical processing of α-ray emitters a glovebox is installed. These instruments are placed in a target room, called Light-Ion Room No.1, and a hot laboratory, as shown in Fig.1. The present paper describes main instruments in the facility.

AVF CYCLOTRON

The JAERI AVF cyclotron[3] is basically the same model as the CYCLONE (Universite Catholique de Louvain, Belgium), but several substantial modifications have been made. For example, the acceleration of 90-MeV protons in a constant orbit mode is realized by using a movable short type resonator for generating a dee voltage of 60 kV.

As seen from the characteristics of the cyclotron listed in Table 1, very energetic ion beams are available. In particular, light ions of proton with energies up to 90 MeV as well as deuteron, ^{3}He and ^{4}He are useful for radioisotope production. For example, a substatial amount of ^{28}Mg will be produced with a 100-MeV ^{4}He beam; this isotope is a useful tracer in life science, but is difficult to produce with a medium-size cyclotron.

IRRADIATION APPARATUS

Since only one beam line was available for the radioisotope-production research, irradiation appratuses of solid, gas and liquid targets must be integrated. This has been realized by setting the holders of solid, gas and liquid targets on a movable plate (see Figs. 2 and 3). The holder retaining

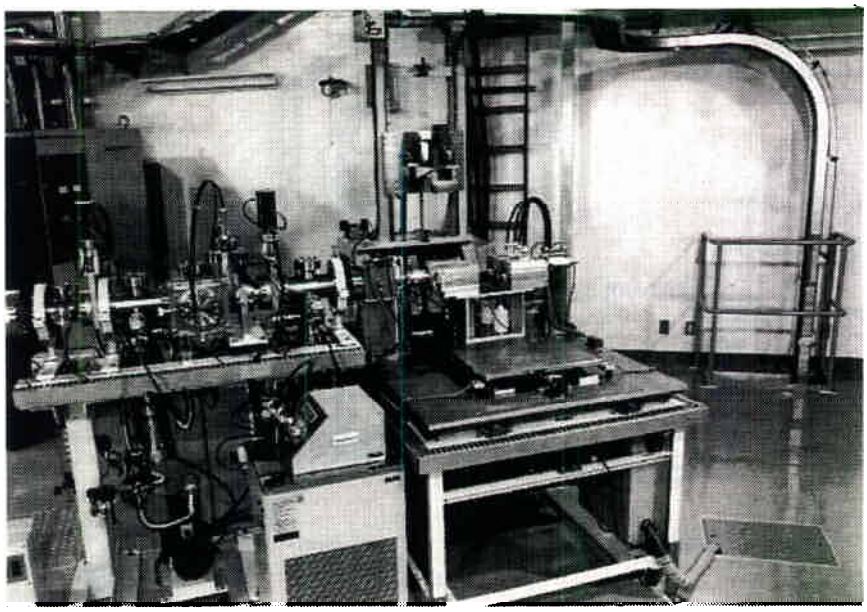

Fig. 2 Irradiation apparatus and the terminal of a solid-target transfer line. See Fig.3.

a target to be irradiated is placed at the beam position and fixed to the end of the beam line with an air cylinder; the solid target held in a fixture is retained in a holder. At present, solid- and gas-target irradiations are possible. Both of the solid and gas targets can be irradiated sequentially at short intervals.

A solid target is irradiated in a vacuum or outside the vacuum. For the irradiation outside the vacuum, a thin metal widow is placed at the end of the vacuum line. The space between the metal window and the target (holder) surface is cooled with a He gas chilled at 5 - 10 °C. The back of the target is also cooled with water chilled at 5 - 10 °C.

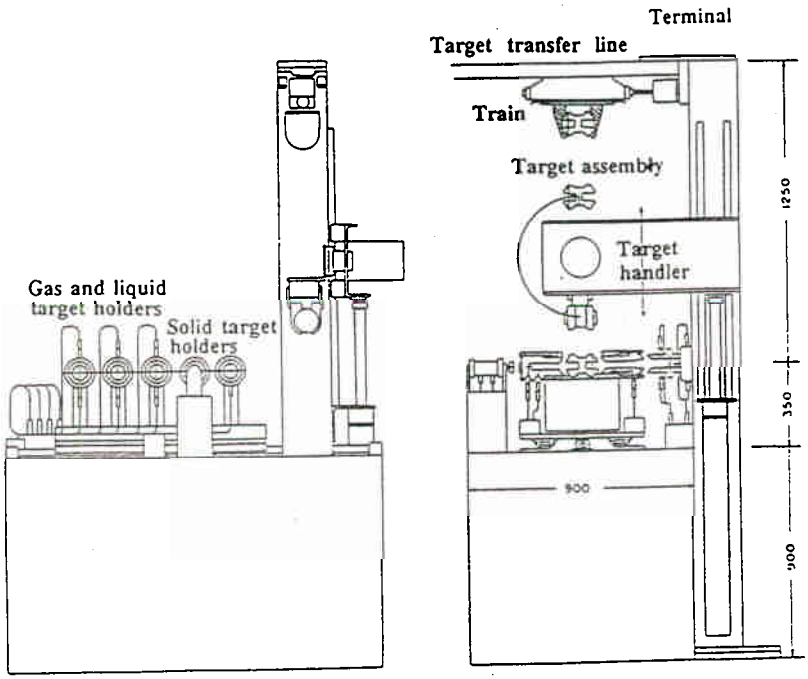

Fig. 3 Irradiation apparatus in connection with the terminal of the solid-target transfer line equipped with a manuplator of solid-target assembly.

SOLID-TARGET TRANSFER SYSTEM

A solid target transfer system is installed to carry a target assembly between a shielded cell and the irradiation position. The entire system, as shown in Fig. 4, consists of monorail lines, trains and terminals handling the target assembly. The monorail lines begin from the terminal in a shielded cell and reach two terminals located at the irradiation apparatus and by an isotope separator described later. The structure of the terminal at the irradiation apparatus is shown in Fig. 3. The length of the rail line to the irradiation apparatus is 35 m. On the rail line, a train having a load of 3 kg can run at

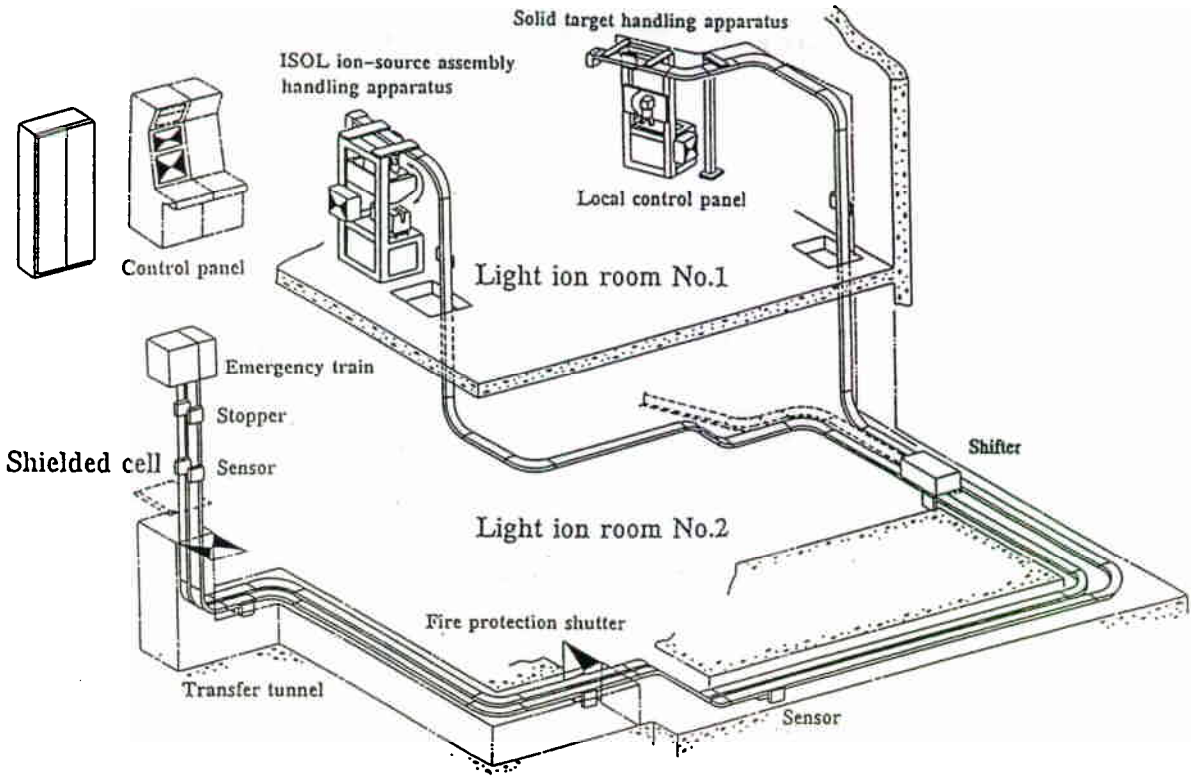

Fig. 4 Solid-target transfer system between the shielded cell and two ports: the irradiation apparatus and the isotope separator on-line.

36 m/min in a horizontal part and 24 m/min in a vertical part.

The control of the system is performed by a sequential program or manually. For the recognition of the running train, the rail line is equipped with sensors. In addition, train stoppers and a rail shifter for future extension. For safety of the system, fire protection shutters are installed along the rail line. Further, another train working as a wrecker for a troubled train stands by at the terminal in the shielded cell (see Fig.5).

SHIELDED CELLS FOR SOLID TARGET

Three shielded cells are installed in the hot laboratory to treat high level radioactivity produced in a solid target. These shielded cells are interconnected to carry a target and a product by a train moving under the floor of the cells. Each of the cells is furnished with a pair of manipulators.

The first cell, depicted in Fig. 4, has a terminal of the solid-target transfer system; a target assembly is unfixed and the radioactivity of the target is measured with an ionization chamber. To bring in high level radioactivity soon after irradiation, radiation shielding is thickest in this cell. Its shielding material is 20 cm thick lead. Its inside is 1.9 m in length, 1.6 m in width and 2.4 m in height. This cell is kept at a negative pressure of 10 mm Aq to the outside, although this cell is not airtight.

In the second cell, a solid target is processed chemically, where a chemical-processing unit for production of an isotope of interest will be placed. Its shielding material is 18 cm thick iron. This cell has an inner box, being airtight to prevent volatile radioactivity from escaping to the workroom. The inner box is kept at a negative pressure of 30 mm Aq. Its airtightness was found to be 0.1 v/o/h. Its

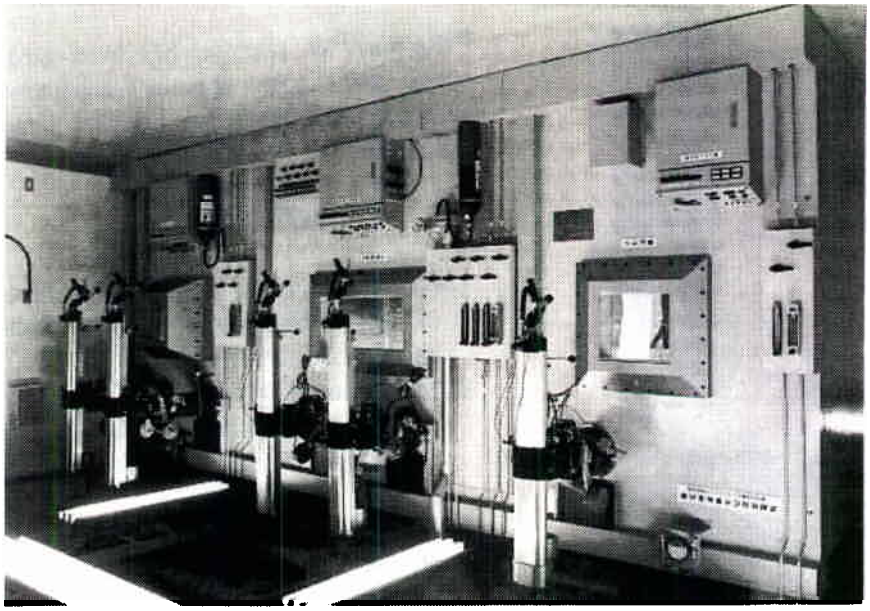

Fig. 5 Shielded cells for the processing of solid targets.

inside is 2.4 m in length, 1.5 m in width and 1.6 m in height.

From the third cell, a product is taken out after its radioactivity is inspected. This cell is not airtight and the shielding material is the same as the second one. The inside of this cell is 1.4 m in length, 1.6 m in width and 2.4 m in height.

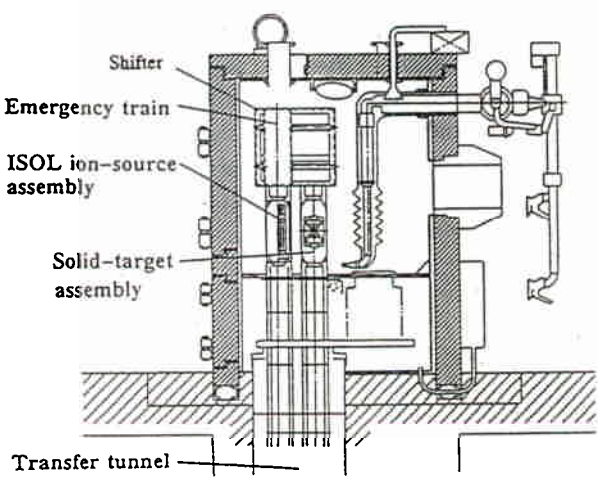

Fig. 6 The shielded cell connected to the solid target transfer line.

SHIELDED CELLS FOR LABELED COMPOUND SYNTHESIS

Units of labeled compound synthesis, called CBB ("Chemical Black Box"), are installed in the shielded cells named CBB cells (see Fig.7). In the CBBs, compounds will be automatically labeled with short-lived positron emitters like ^{11}C, ^{13}N, ^{15}O and ^{18}F, produced from gas and liquid targets. The CBB cells are furnished with tubing of irradiated targets, compressed air and nitrogen, and cables to control the CBBs. The radiation shield is equivalent to 10 cm thick lead. The inside of the CBB cells is 1.0 m in length, 0.9 m in width and 1.2 m in height. In the front of the CBB cells, there are two movable radiation shields; this means that two of the three CBB cells can be shielded. Behind the front shields, doors made of lucite are placed to suppress the flow of the air from inside to outside.

In addition, an isotope separator is installed in the target room. Although the isotope separator is intended to use mainly for the spectroscopic study of unstable nuclei, it enables us to produce isotopically purified products and radioisotope beams[4].

So far 20-MeV proton beams have been applied to the production of some radioisotopes. The production method of ^{139}Ce has been established, which is used as a radioactive source for calibration of Ge detectors; until recently this isotope had not been produced in Japan. The development of the production of the carrier-free ^{186}Re has also started for its medical use. The excitation function of the

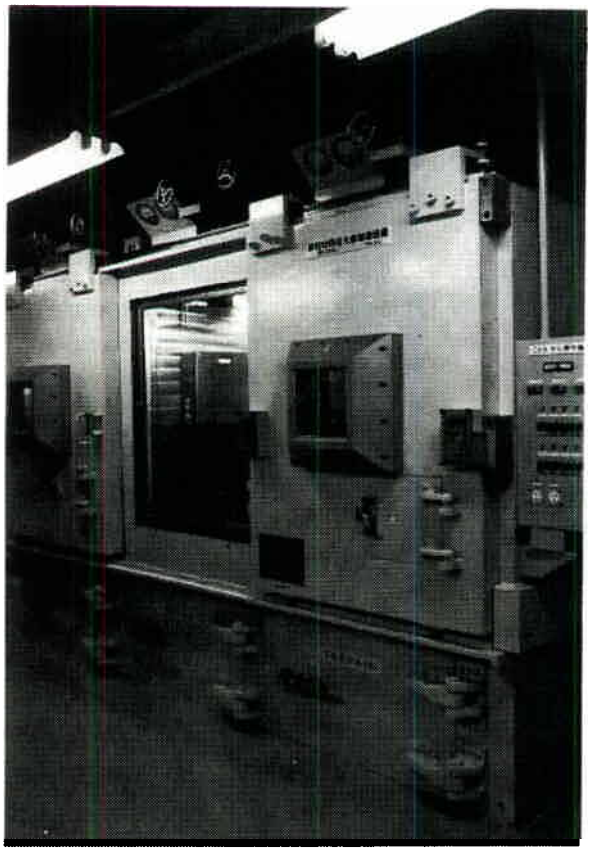

Fig. 7 The CBB cells in which CBBs for labeled compound synthesis are placed.

$^{186}Re(p,n)^{186}W$ reaction has been measured and some chemical-separation processes of ^{186}Re from a tungsten target are tested.

REFERENCES

1) S. Baba, K. Hata, M. Izumo, R. Motoki and T. Sekine, Int. J. Appl. Radiat. Isot. **36**, 564 (1985).
2) M. Izumo, H. Matsuoka, T. Sorita, Y. Nagame, T. Sekine, K. Hata and S. Baba, Appl. Radiat. Isot. **42**, 297 (1991).
3) K. Arakawa, Y. Nakamura, W. Yokota, M. Fukuda, T. Nara, T. Agematsu, S. Okumura, I. Ishibori, T. Karasawa, R. Tanaka, A. Shimizu, T. Tachikawa, Y. Hayashi, K. Ishii and T. Satoh, Proc. 13th Int. Conf. on Cyclotron and their Applications, Vancouver, Canada, p.119 (1992).
4) T. Sekine, S. Ichikawa and Y. Hatsukawa, Proc. 2nd Int. Symp. Advanced Nuclear Energy Research – Evolution by Accelerators –, Japan Atomic Energy Research Institute, Jan. 24–26, 1990, Mito, Japan, p.520.

Status of the Cyclotron /P.E.T. Facility at the State University of New York at Buffalo

S.A. Toorongian and M.S. Haka

Introduction

A new P.E.T./Cyclotron facility has been constructed on the Main St. campus of the State University of New York at Buffalo to service the needs of Nuclear Medicine departments in Buffalo and throughout the Western New York area. This facility is jointly funded and operated by S.U.N.Y. and the Veterans Administration. The cyclotron, as well as the research labs and a nuclear pharmacy to prepare non-positron emitting radiopharmaceuticals, are located in a newly constructed facility on campus. The P.E.T. scanner is located in the Veterans Administration Hospital adjacent to the campus. The two annexes are connected by a pneumatic transport "rabbit" system. The cyclotron and all radiopharmaceutical synthesis apparatus have been purchased from Ion Beam Applications s.a. of Lovain-la-Neuve Belgium.

Cyclotron and Targetry

The cyclotron purchased for the P.E.T. project is an IBA model Cyclone-30. This machine is a proton only accelerator capable of producing up to 30 MeV particles. The targets are all mounted directly on the outer radius of the machine with no external beam lines. We currently have five targets and one beam-stop mounted with space for up to four more. The targets currently in use are: two identical silver body liquid targets for F-18 production, one aluminum body liquid target for production of N-13 ammonia, one aluminum body gas target for O-15 production, and one aluminum body gas target for production of C-11.

Oxygen-15 Water Production

Oxygen-15 is produced via the ^{16}O (p,pn)^{15}O reaction. The target is an aluminum bodied cylindrical target with an internal volume of 15 mL. Inlet and outlet valves are from Clippard and are in a gas handling mainfold box remote from the target. The target foils are 25μm Havar at the target, and 25μm aluminum at the cyclotron tank. Target valve operation is completely controlled by the PLC (Programmable Logic Controller, Siemens model S135U). The target material is 300 psi Zero Grade oxygen. The target purge gas is high purity helium. The ^{15}O gas is transferred via 1mm ID, 1/16" OD stainless steel tubing. Water is produced by mixing the stream of ^{15}O gas with high purity hydrogen to a percentage of approx. 5% H_2 and then passing these gasses through a column containing ~4g of palladium wire enclosed in a furnace heated to 150°C. The ^{15}O water vapor produced is then bubbled into a solution of sterile saline.
Production Data: 30 MeV, 25μA, 5 min. produces ~850 mCi at E.O.S. Saturation yield: 87 mCi/μA

Nitrogen-13 Ammonia Production

Nitrogen-13 Ammonia is produced in target by the $^{16}O(p,a)^{13}N$ reaction. The target body is constructed of aluminum with an internal volume of 1600 μL in the beam strike region and

an additional 400 µL expansion chamber. The target foil was originally 25µm Havar but has since been substituted with 50µm titanium. The cyclotron tank foil is 25µm aluminum. The inlet/outlet valve is a Rheodyne model 7030 HPLC valve which is remotely actuated and controlled by the PLC. The target is filled using a syringe pump (made by IBA) with a 100 mL reservoir. The fill/dump lines are 0.8 mm ID Telfon with Teflon or PEEK fittings. The target is sealed during irradiation so there is no overpressure. The liquid is transferred with helium pressure. The target is filled to ~1650 µL with high purity water containing 5 mM EtOH (29µL in 100mL, 5 $X10^{-4}$M).
Production Data: 16.5 MeV, 25µA, 5 minute irradiation produces ~150 mCi at E.O.S. Saturation yield: 20 mCi/µA. Specific Activity $\geq$ 297 mCi/µmol determined using a spot test.

Carbon-11 Production

Our experience with carbon-11 production has been very limited to date and our yield information was mainly acquired during acceptance testing. During these tests we used irradiation and production parameters supplied by IBA, no attempt was made to modify or optimize yields. Carbon-11 CO_2 is produced via the $^{14}N(p,a)^{11}C$ reaction in a cylindrical aluminum body target with an internal volume of 15 mL. The target foil (degrader) is 600 µm aluminum while the tank foil is 25 µm aluminum. The inlet and outlet valves are Clippard model ETO-3-24V. The valves are remotely controlled by the PLC. The transfer lines are 1mm ID 1/16 inch OD stainless steel. The purge gas is argon. The target material is 0.5% oxygen in Zero Grade nitrogen pressurized to 300 psi.
Production Data: 20.5 MeV , 40 µA, 20 minute irradiation produced ~1850 mCi at E.O.B. Saturation yield: 94 mCi/µA.

Carbon-11 Acetate Production

Acetate is produced from C-11 CO_2 by first trapping the gas in a stainless loop cooled with liquid nitrogen. The gas is then reacted with methyl magnesium bromide (Aldrich) in diethyl ether (freshly distilled from sodium). The solution is then hydrolyzed with 6N HCl and subsequently extracted with sodium bicarbonate and then distilled into sterile saline. The synthesis takes 20 minutes to complete. **Production Data:** 20.5 MeV, 47.5µA, 20 min. irradiation produced 425 mCi at E.O.S.

Carbon-11 Carbon Monoxide Production

C-11 CO_2 is produced and then trapped in a stainless loop with liquid nitrogen. It is then passed through an oven (950°C) containing activated carbon (Aldrich, 24,223-3) and then delivered to point of use.
Production Data: 20.5 MeV, 47 µA , 20 min. , yield: 1400 mCi E.O.B.

C-11 Hydrogen Cyanide Production

C-11 CO_2 is produced then trapped in a stainless steel loop with liquid nitrogen. It is then transferred as a bolus via helium pressure through a gas processing module in the cyclotron vault. This module consists of a 400°C furnace containing a column filled with nickel powder on silica,

an in-line Oxysorb trap, and a second furnace at 950°C containing a coil of 0.1mm platinum wire (8g) as a catalyst. The bolus is mixed with 5.5% hydrogen in nitrogen and then passed through the first furnace where it is converted to C-11 methane. It then passes through the Oxysorb trap and is mixed with anhydrous ammonia prior to the second furnace where it is converted to HCN.
Production Data: 20.5 MeV, 45 µA, 20 min., yield: 620 mCi E.O.S.

F-18 Fluoride Production

The production of F-18 fluoride and subsequently FDG has been done on a routine basis at our facility since February of 1992. The fluoride is produced by the reaction $^{18}O(p,n)^{18}F$. The reaction is done in the liquid phase using O-18 water at 90-98% oxygen-18 enrichment, purchased from Isotec Inc. We are currently using two identical all silver targets with an internal volume of 300µL. We also possess an all silver "large bore" target with an internal volume of 1.7 mL which can be installed on the beam port in place of one of the small bore targets in about 10 minutes. The target foils for all three targets were originally 25 µm aluminum at the cyclotron tank and 25 µm Havar on the target side. The target foils have since been replaced with 50 µm titanium foils to increase life expectancy and reduce costs. The valve and load/dump system are of exactly the same design as the N-13 Ammonia target system. The transfer lines are all 0.5 mm ID, 1/16" OD Teflon. Fittings are by Upchurch or Neptune Research and are PEEK or Kel-F.
Production Data: 18 MeV, 15 µA, 60 minute irradiation produced an average of 675 mCi at E.O.B. (saturation yield = 143 mCi/µA) using the 300 µL target. We hvae only used the large volume target during acceptance testing where it was irradiated for 1 hour at 30 µA and produced around 1900 mCi at E.O.B. (saturation yield = 201 mCi/µA).

Fluorodeoxyglucose Production

FDG is produced at SUNY Buffalo with two nearly identical synthesis modules purchased from IBA. We also have an oxygen-18 recovery module manufactured by IBA which is used routinely. The FDG modules prepare the radiopharmaceutical using the nucleophilic substitution method of Hammacher et al. The recovery module uses Bio-Rad AG1-X8 ion exchange resin converted to the hydroxide form to trap the fluoride. The fluoride is then eluted using 100 µL of potassium carbonate solution (1mg per 100µL). The elution is then followed by a 300 µL rinse using high purity water. The solutions are transferred into the modules for azeotropic drying and complexation with the Kryptofix. The operation of the modules is completely controlled by the PLC. Synthesis time is approximately 50 minutes. Quality control using standard techniques takes about 15 additional minutes.
Production Data: Using a one hour irradiation of the small volume (300 µL) target we produce about 675mCi of fluoride when the target is dumped to a test tube in the dose calibrator. Assuming a similar yield of fluoride(we do not actually measure the target production at this time) we produce an average of about 150 mCi of FDG at E.O.S.

FDG Production Problems

We have encountered various problems in the use of the FDG production system since routine production began, below is a list of the major malfunctions:

Targetry

Fluoride production seems to fall off after approx. 10 irradiation's(~150μA-H) necessitating target cleaning and foil replacement (both foils).

Foil rupture occurs frequently when beam current exceeds about 19 μA on target.

Synthesis Modules

Leaks in fittings from target to module causing loss of activity (Improperly swaged when originally assembled). Leaks at Neptune Research valves caused by teflon fittings used with teflon valve bodies (cold flowing). Leak through poppet hole of three-way Neptune valve (valve failure, cause unknown).

Suspended metallic particles causing some temporary transport line plugging during initial phase of use.

Cracking of teflon transport lines within the module. This occurred on the moving "carrier" portion of the apparatus where tubing was bent through a tight radius as well as the fluoride inlet valve.

Transfer pressure problems on one of the modules causing incomplete transfer of reagents in the time allotted by the PLC. This problem was corrected by IBA in the second module we received by adding another pressure regulator to the system.

Uncontrolled heating of the ovens caused the failure of multiple syntheses. This problem appears to have been caused on one occasion by a bad connection between the temperature controller and the oven, and on another occasion by oxidation on the thermocouple contacts.

Malfunctioning of the fluoride solution inlet valve causing radioactivity to be lost. This problem may have been due to radiation damage and was corrected by IBA on the second module we received (a different type of valve was used).

Recurring problems with poor sealing of reagent vial septa. Also recurrent inappropriate movement of transfer tubing leading into reaction vials causing incomplete transfer of reaction solutions.

Micro switch failure caused by moving carrier portion of module overrunning stops. This caused the module to become "lost" during the synthesis since feedback to the PLC was incomplete.

Unacceptably low final product pH. (~4 - 5) This problem was remedied at IBA's suggestion by adding 100 μL of saturated sodium bicarbonate solution to the final dose vial prior to the synthesis.

Large fluctuations in the amount of final product from run to run, even when no mechanical problems were present.

FDG Production and Quality Control at North Carolina Baptist Hospital Bowman Gray School of Medicine P.E.T Center

Richard E. Ehrenkaufer, Ph.D.
Bowman Gray School of Medicine, Radiology/P.E.T Center,
Medical Center Blvd., Winston-Salem, NC 27157

The PET Center at North Carolina Baptist Hospital-Bowman Gray School of Medicine has been in operation since January of 1992. The radioisotope, radiopharmaceutical production hardware are comprised of Siemens/CTI RDS 112, 11 MeV, negative ion (H^-) cyclotron and associated radioisotope and radiopharmaceutical production equipment.

^{18}FDG is produced using the Siemens/CTI CPCU production system described by Padgett using the Hamacher nucleophilic synthesis. Over a recent three month period we observed a fluorine target production [silver body target, $^{18}O(p,n)^{18}F$] saturation yield of 98.3 ± 7.7 mCi/µA (n=46). During this time we averaged 615 ± 34 mCi of [^{18}F]fluoride ion for a 60 min. run at a beam current of 20 µA, with the ^{18}FDG production for these runs averaging 223 ±42 mCi (n=25, range of 139 mCi-285 mCi). All over EOB yield for these runs was 55.7% ± 8.5%, with EOS yield (~1 hr. from EOB) of 36.6% ±5.7%. Due to decreasing yields, target rebuild is performed after about 50 runs.

In the nucleophilic production of ^{18}FDG the main impurities have shown to be unlabeled sugar by-products (Cl-DG, glucose, mannose), and reagent (K[2.2.2],) and solvent (diethyl ether, acetonitrile, ethanol) contaminants. We have analyzed nearly 100 samples and found, using ion chromatography (see Alexoff, BNL), 53. ±24 µg/10 mL Cl-DG, and < 15 µg/10 mL FDG. Using gas chromatography, we analyzed for acetonitrile and diethyl ether and found 396 ±280 ppm acetonitrile (range 94-1056 ppm), and 572 ±283 ppm ether (range 219-1259 ppm). These levels do not constitute a health hazard for humans.

Table 1. Atomic Absorption Determination of Metal Ion Content of O-18 Target Water Samples[1]

	Ag	Ca	Cr	Cu	Fe	Mg	Mn	Na	Ni	Si	Zn
PV2911[2]	0.6	1.1		0.1	1.5	1.0	1.0	33.1			37.0
PV2911[3]		0.4		0.7	5.3	1.0	1.1	**9950**			41.2
PV Lot ?		1.6		0.6		**73.1**	3.7	35.4	12.9		93.8
PV2677		1.3		0.6	4.7	1.1	1.6	40.6	14.3		61.0
PV2917		1.0		0.03		0.8	0.5	28.2			63.9
PV3286		2.5	**378**	7.4	15.5	**63.4**	6.8	22.7	26.6		87.4
DI/Lab[4]	0.08		95.4	1.4	349	71.2	5.0	86.9	28.8	4.4	41.1
DI [5]				0.05	1.5	0.4		25.1		4.8	31.3
Baxter [6]				0.06	2.9	69.5		16.5			5.3
Tap		15.1	2.1	3.6	33.6	197	1.5	5640	13.0	16.5	139
HPLC [7]		0.09	1.0	0.08	11.6	0.9	0.6	23.9	4.9		2.0

1 Concentrations are in ppb, with detection limits of ~ 0.05 ppb. Bi, Cd, In and Pb were below detection limits in all samples.

2 O-18 water samples (PV lot numbers) are from Isotec. This sample initially could not produce F-18-FDG.

3 After distillation, F-18-FDG production restored.

4 Labconco water purifier.

5 Wat-er-boy, commercial DI water source.

6 Baxter, Sterile Water for Injection, USP, used in N-13-ammonia production.

7 Fisher HPLC water.

Finally, due to reports of interfering metal contaminants in enriched ^{18}O-target water, we analyzed for trace elements by graphite furnace atomic absorption spectroscopy using a continuum source xenon lamp and photodiode array detector. Five Isotec water samples were analyzed (including one that yielded no ^{18}F-FDG) for the presence of 14 elements including Ag, Bi, Ca, Cd, Cr, Cu, Fe, Mg, Mn, Na, Ni, Pb, Si and Zn. No potentially interfering levels of these elemental contaminants were found. Levels generally ranged from undetectable (< 0.05 ppb) up to just under 100 ppb.

Utilization of the CS-30 Cyclotron at the Duke University Medical Center

B.W. Wieland, C.J. McKinney and M.F. Dailey

Department of Radiology PET Facility,
Duke University, Durham NC

Present routine radionuclide production includes ^{18}F fluoride from protons on ^{18}O water, ^{13}N ammonia from protons on ^{13}C slurry, ^{15}O water from deuterons on nitrogen gas, and ^{211}At from alphas on bismuth metal. Clinical PET using two tomographs (GE 4096 and Advance) is done Tuesday through Friday, typically 4 to 11 patients per day using ^{15}O water, ^{13}N ammonia, and ^{18}F FDG synthesized with a GE Microlab. Clinical patient studies are 50% neurology using FDG, 45% body using FDG, and 5% cardiology using ammonia and FDG (oncology in these three areas totals 60%). ^{15}O water for clinical research patients (THC and cognitive) is produced twice a week. ^{211}At is produced about twice a week for monoclonal antibody labelling.

For future routine PET production, we plan to use proton-only reactions and produce increased yields by utilizing p,pn reactions on natural abundance water for in-target ^{15}O water, p,α reactions on dilute aqueous ethanol for in-target ^{13}N ammonia, and a higher-energy higher-pressure ^{18}O enriched water target for ^{18}F. In order to achieve higher beam currents and simultaneous production, we plan to experiment with a triple tandem target using separate recirculating p,pn and p,α sections as the degrader for the ^{18}F target.

A new target based on $^{16}O(p,pn)^{15}O$ is being developed to produce NCA ^{15}O ozone using recoil escape from submicron silica or alumina fiber beds of high porosity. High-purity argon flowing in numerous jets normal to the beam is used to stop the recoils, cool the fibers and convey the ^{15}O ions to a region just outside the beam strike where trace oxygen is introduced to favor the production of ^{15}O ozone. The labeled ozone is desired for pulmonary distribution research studies in rats using both conventional tissure counting and positron-track autoradiography to determine the distribution of the ozone down to an alveolar level. We are also exploring the fiber/gas morphology for target applications useful in low-energy high-current accelerators for clinical PET.

In order to achieve higher production of ^{211}AT than possible with our external target, and to initiate produciton of ^{124}I, we are planning to install an internal beam target system in the summer of 1994. The system is manufactured by Cyclotron Inc. of Napa, CA. We are also working on brush electrode target plating, and induction heating distillation recovery systems for ^{211}AT.

Production of ^{55}Co for Positron Emission Tomography

J.R. Dahl, J. Pan, R.A. Matacchieri, A. Belakhlef, D. Margouleff, North Shore University Hospital/Cornell University Medical College, Manhasset N.Y.,

INTRODUCTION

Cobalt-55 is a radioisotope of cobalt which decays with a 17.5 hour half life, 77% by positron emission and the remainder by electron capture. A number of other gamma photons are emitted during each decay event. It may fill the need for a positron emitting tracer for labeling compounds of medical and biological interest with a radionuclide with a half-life longer than that offered by the commonly used positron emitting radionuclides, ^{11}C, ^{13}N, ^{15}O, and ^{18}F. It provides the opportunity to use very high specific activity radioactive divalent cations to visualize nerve cell degeneration in the brain without sacrifice of the subject. A second factor which generates interest in ^{55}Co is that Co^{++} ion mimics Ca^{++} ion in certain neuronal tissue, providing the opportunity to investigate Ca^{++} kinetics in degenerating brain tissue without sacrifice of experimental animals [1]. A third source of interest is the one that stimulated modern interest in ^{55}Co: When substituted for ^{57}Co[2] as the label in radio labeled bleomycin, this important and widely used tumor scanning agent [3] becomes even more important for similar studies using PET [4,5].

Published calculations [6] comparing the internal radiation dose from 1 micro-curie of ^{55}Co and of ^{57}Co indicate the dose is strongly dependent upon the biological half-life, and the dose from ^{55}Co will be comparable to that of ^{57}Co.

The objectives of this project are the development of a method for the routine preparation of ^{55}Co via the $^{54}Fe(d,n)^{55}Co$ nuclear reaction, using a small medical cyclotron, and to investigate its utility as a radiotracer for positron emission tomography (PET).

MATERIALS AND METHODS

To realize the goal of developing a method of preparing ^{55}Co in which the investment in ^{54}Fe would be minimized, it appeared from a survey of the literature that success would be most easily achieved through developing a process integrating an electroplating procedure to prepare an ^{54}Fe target on a copper backing, which, following bombardment could be stripped using HCl, and the ^{55}Co separated from the target material by ion exchange chromatography. No economical solid target bombardment apparatus was available which filled the requirements, so an inexpensive holder, shown in Figure 1.was built. A small target, preferably of copper is sealed by o-rings into the coupling flange. It is positioned by the water cooled target holder which is held in place by the clamping ring. Threads allow the clamping ring to be screwed onto the coupling flange, drawing the water cooled target holder and target up tight and effecting the seals at the O-rings. The limiting factor in this design is that the manual operation required places the hands in close proximity to the irradiated target. Only small amounts of beam can be applied to the target to minimize radiation exposure.

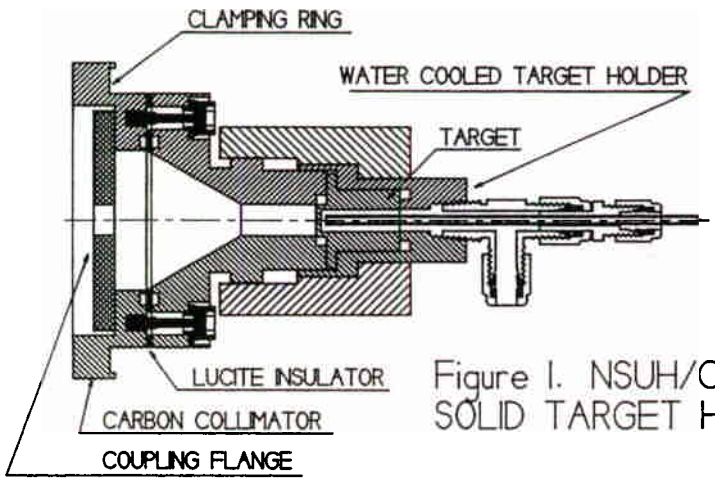

Figure 1. NSUH/CUMC SOLID TARGET HOLDER

Three hundred milligrams of 99.92% ^{54}Fe (Isotec Inc.) have been obtained. Prior to preparing plated targets with this expensive material, Fe of natural isotopic abundance was employed to develop a n electro-plating procedure. About 100 mg of powdered Fe is dissolved in 9M HCl which is then combined with a solution of 2M $CaCl_2$ H_2O to yield a solution in which the Fe concentration is about 4M. About 1 ml of this solution is placed in the electroplating cell (figure 2) and using a Pt electrode of about 9 square millimeters area, at a current density between 255 and 500 uA/cm^2 a deposit of about 20 to 40 mg Fe is obtained in about 3 to 4 hours. This target was bombarded for 30 minutes at 1 uA to provide samples from which the radiochromatography technique could be proven.

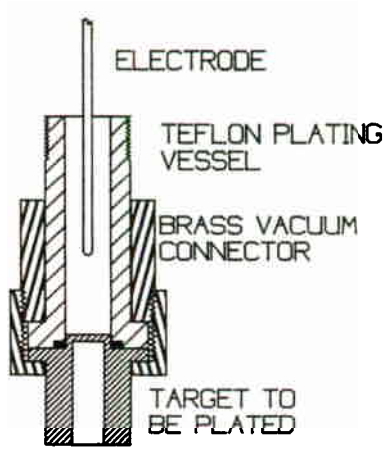

Figure 2. TARGET PLATING VESSEL

After bombardment the target is dissolved in about 1.5 ml of 9M HCl which is applied to an anion exchange column (Dowex 1X8, Cl^-form, 100-200 mesh, 8X80mm) which has been equilibrated with 30 ml 9M HCl. Mn and Cr isotopes co-elute while Co and FE remain on the column. 16ml of 9MHCl are used to insure complete removal of the Mn and Cr. Greater than 85% of the Co is then eluted with 5M HCL. The Fe is recovered by washing the column with 0.1MHCl. One ml samples were collected and examined with a high purity Ge detector coupled with a 4096 multi channel analyzer to determine the composition of each fraction. Samples were spot tested with Fe^{++}/Fe^{+++} thiocyanate, sensitive to a few micrograms of Fe, to determine the presence/absence of Fe.

RESULTS

Unlike production plating of Fe in which elemental iron electrodes serve to maintain the Fe in the plating solution as Fe^{++}, through corrosion of the anode, in a cell using a platinum anode, oxidation of the Fe^{++} to Fe^{+++} occurs. Plating becomes quickly inefficient. An effort to minimize this consisted of isolating the anode from the cell by placing it in a separate container, and joining the two containers with a salt bridge of agar saturated with KCl. These experiments are still underway, but appear promising. Oxidation of the Fe^{++} seems to be greatly reduced as evidenced by absence of a color change in the plating solution.

The ion exchange chromatography technique requires about 6 hours to complete, but provides a good yield of product with no detectable Fe, either by spot test or by gamma spectroscopic examination.

CONCLUSION

The production of ^{55}Co by the deuteron bombardment of highly enriched ^{54}Fe is feasible. Routine production of amounts useful in bio-medical studies requires further improvement of the electroplating technique. Design of a solid target holder which will release the irradiated target into a waiting shielded container for removal to the processing cell has begun. Construction of this device is necessary to further investigation. The radio-chromatography separation is slow compared to those procedures employed with shorter half-lived radionuclides, but is fast enough for routine use in this application.

REFERENCES

1) Gramsbergen, J.B.P., Veenma-v.d. Duin, L., Loopuijt, L., Paans, A.M.J., Vaalburg, W., Korf, J., Imagining of the Degeneration of Neurons and Their Processes in Rat or Cat Brain by $^{45}CaCl_2$ Autoradiography or $^{55}CoCl_2$ Positron Emission Tomography. J. Neurochem., 50:, (6), 1798-1807, 1988.

2). Neirinckx R.D., Cyclotron Production of Ni-57 and Co-55 and Synthesis of their Bleomycin Complexes, Int. J. Radiat. & Isot., 28: 562-562, 1977.

3) Poulose, K.P., Watkins, A.E., Reba, R.C., Eckelman, W.C., Goodyear, M., Cobalt-labeled Bleomycin - A New Radiopharmaceutical for Tumor Localization. A Comparative Clinical Evaluation with Gallium Citrate. J. Nucl. Med., 16: (9), 1975.

4) Lagunas-Solar, M.C., Jungerman, J.A., Cyclotron Production of Carrier-free Cobalt-55, a New Positron-Emitting Label for Bleomycin, Int. J. Appl. Rad. & Isot. 30:, 25-32, 1979.

5) Sharma, H., Zweit, J., Smith, A.M., Downey, S., Production of cobalt-55, a Short-lived, Positron Emitting Radiolabel for Bleomycin. Int. J. Radiat. Appl. Radiat. & Isot. 37: (2), 105-109, 1986.

6) Sharma, H., Zweit, J., Smith, A.M., Downey, S., Production of cobalt-55, a Short-lived, Positron Emitting Radiolabel for Bleomycin. Int. J. Radiat. Appl. Radiat. & Isot. 37: (2), 105-109, 1986.

The BLIP Upgrade Project

L. F. Mausner
Medical Department, Brookhaven National Laboratory, Upton NY.

As part of the report from the labs I offer this summary of the BLIP Upgrade Project. This $6M construction project, funded by the DOE Office of Energy Research for a Fiscal Year 1994 start, is anticipated to be complete in June 1996. The purpose of the BLIP Upgrade Project is to reverse the erosion in radionuclide production capability and availability that has occurred at BNL to enable BLIP to serve as a reliable source of selected radionuclides in the interim until the NBTF comes on line. The project goals are to increase the proton beam current from 50 µA to 145 µA, improve BLIP/LINAC reliability, and enhance our processing facilities to handle the higher levels of radioactivity expected. To improve research capability we will provide beam energy variability from 66-200 MeV in 21 MeV increments. Finally, to improve radionuclide supply we propose to run the facility up to 46 weeks per year with 90% beam availability (1.5d/month maintenance = 5% + 5% downtime). At this point there is no committment from either the Office of Energy Research or the Office of Nuclear Energy to provide the necessary operating funds. We would not make any of the additional radionuclides envisioned for the NBTF. The specific facility modifications are summarized below.

To achieve the desired performance from the LINAC, we have concluded that the best way to increase the average current is to make small improvements in several of the operating parameters, rather than trying to make a large increase in a single parameter. The LINAC presently operates at a peak output of 25 mA, a pulse width of 450 µs, and a repetition rate of 5 Hz. These parameters will be changed to 30 mA, 650 µs, and 7.5 Hz respectively. We have reviewed limitations on reliable operation at increased intensity and will replace or upgrade certain old components, such as the high power RF transmission lines and power supplies. Indeed, most of the cost of the linac changes is to address reliability issues, not increased intensity.

At the BLIP facility itself, the high beam intensity will deposit significantly more heat in the targets and create more radioactivity. We are planning to replace the BLIP target cooling manifold and target assembly with a more efficient new design. Extra lead and lead glass shielding will be added to our target handling hot cell. Our obsolete computer control system will be replaced. Additional floor space for the experimental area is also planned.

To perform more frequent isotope processing at higher levels of radioactivity, substantial improvement to the Hot Laboratory is also necessary. We plan to add two new hot cells, an adjacent fume hood, and a new system to solidify liquid radwaste. We will also improve the ventilation and shielding at the existing hot cells.

Present Status and Prospects of Production of Radioisotopes with High Radiochemical Purity on the FLNR Accelerators.

Dmitriev S.N., Gulbekyan G.G., Oganessian Yu.Ts.
Joint Institute for Nuclear Research, Flerov Laboratory of Nuclear Reactions
Dubna, Moscow reg., 141980, Russia.

The purpose of the FLNR work on radioisotopes is:

1. Support of our own nuclear physical and radiochemical research, such as synthesis of transfermium elements and study of their chemical properties.

2. Production of radioisotopes for special medical, biomedical and ecological research.

The Laboratory has three operating accelerators: two heavy ion cyclotrons U-400 and U-200 and one compact electron accelerator - microtron MT-25.

For the production of radioisotopes in the reactions ,n and n, we use a compact electron accelerator MT-25. The main parameters of this machine are presented in Table 1.

Table 1. Main parameters of the microtron MT-25.

1.	Number of orbits	26
2.	Maximum energy of accelerated electrons, MeV	25
3.	Range of electron energy variations, MeV	10-25
4.	Average current of accelrated electrons, mkA	20
5.	Yield of photoneutrons, 1/sec	$1\ 10^{12}$
6.	Thermal neutron flux, n/cm^2 sec	$1\ 10^{9}$
7.	Power consumption, kW	20
8.	Weight of the magnet, t	2.5
9.	Magnetic field inhomogeneity in the operation region B/B%	0.2
10.	Diameters of poles, mm	1022
11.	Diameter of the magnet, mm	1520
12.	Height of the magnet, mm	260

From our point of view the greatest prospects for the microtron lie in the production of radiochemically pure ^{123}I in the reaction ^{124}Xe(,n)^{123}Xe-^{123}I [1].A scheme of the facility which we use to test this method is described below.

The target chamber is a cylindric vessel with a working volume of 10 cm^3. The chamber is manufactured of tantalum and its bottom serves simultaneously as a converter of electrons. Thus, the maximum closeness of the irradiated material with the braking target is ensured which increases substantially the yield of the reaction. The chamber is being filled with Xe via freezing on. During irradiation the chamber is cooled with water. The working pressure of Xe in the chamber is 200 atm. The chamber is surrounded by a shielding volume with a trap for Xe against an accidental leakage. After the irradiation during 10 hr the chamber is cooled down for 4 hours after which Xe is freezed out into a special vessel, the chamber is dismounted and transported to the radiochemical laboratory, where ^{123}I is washed off from the inner walls of the chamber with a solution of NH_4OH. The solution is
evaporated to dryness and the residue is dissolved in a small volume of weak solution of NaOH (pu 9).

As a result at the conditions indicated (average electron current 20 μA, boundary energy of γ-quanta -25 MeV, irradiation time 10 hr, cooling time 4 hr) from 11 g (2l) of Xe-124 with 99.9% enrichment 200 mCi of ^{123}I was obtained. The radiochemical purity of ^{123}I preparation was $<10^{-6}$ Bq/Bq, the chemical form -I^- >95%.

At present we are improving this method. The major attention is paid to the following two problems:

(i) Partial up-dating of the microtron including the change of the micriwave-generator for a more powerful one. This will allow to increase the electron current up to 50 mA and, consequently, to increase the yield of ^{123}I up to 500 mCi.

(ii) Up-dating of irradiation chambers, mainly in the direction of automation.
Table 2 presents the parameters of heavy ion beams from the U-200 cyclotron.
Among a big enough number of research performed by us on this machine within the last two years the most interesting and difficult one was the production of radiochemically pure preparations of ^{237}Pu, ^{236}Pu and ^{26}Al.

Table 2. Beam parameters of the cyclotron U200.

Ion	E_{max} MeV/A	Intensity I, s^{-1}
$^{3}He^{+1}$	16	$5\ 10^{14}$
$^{4}He^{+1}$	9	$5\ 10^{14}$
$^{4}D^{1+}_{2}$	9	$5\ 10^{14}$
$^{14}C^{3+}$	9	10^{13}
$^{14}N^{2+}$	3	10^{13}
$^{14}N^{3+}$	6.7	10^{13}
$^{16}O^{4+}$	9	10^{13}
$^{20}Ne^{4+}$	5.8	10^{13}
$^{20}Ne^{5+}$	9	10^{12}
$^{22}Ne^{5+}$	7.5	10^{12}
$^{40}Ar^{7+}$	4.5	10^{11}
$^{40}Ar^{8+}$	5.8	$5\ 10^{10}$

Pu-237

The considarable interest to the problem of the production of ^{237}Pu is based on the fact that it is the only Pu isotope which answers the medical requirements to the study of metabolism of Pu in the human body in vivo [2].

^{237}Pu decays principally by electron capture with a half-life of 45.3 days and main X-ray energy of about 100 keV and have a very low intensity alpha-branch. However, a ^{237}Pu preparation suitable for human injection must be substantially free from nearest Pu isotopes: ^{236}Pu and ^{238}Pu, which are the long lived alpha-emitters.

The main goal of our work was the elaboration of the method of producing a radiochemically and isotopically ultra pure ^{237}Pu preparation.

A simple calculation shows that the ratios of the activities of ^{236}Pu and ^{238}Pu to the activity of the ^{237}Pu must be less than 10^{-6} for the effective dose of the Pu preparation to be formed in the main by the ^{237}Pu.

Besides, this method is to produce high activity ultra pure ^{237}Pu (at least 100 kBq) to attract practical interest. To achieve this goal the optimal irradiation conditions were determined and an additional enrichment of ^{237}Pu with a mass-separator was used.

The ^{235}U (99.993%) target 5 $mg.cm^{-2}$ (Fig.1) was irradiated with ^{4}He-ions with the i nitial energy of 25 MeV at the ion-beam current of about 30 A during 70 hours. The activity of the ^{237}Pu in the solution after its extraction from target was about 1.5 MBq and the ratio of Pu isotopes was 1.6 10^{-4}($^{236}Pu/^{237}Pu$) and 1.3 10^{-4} ($^{238}Pu/^{237}Pu$).

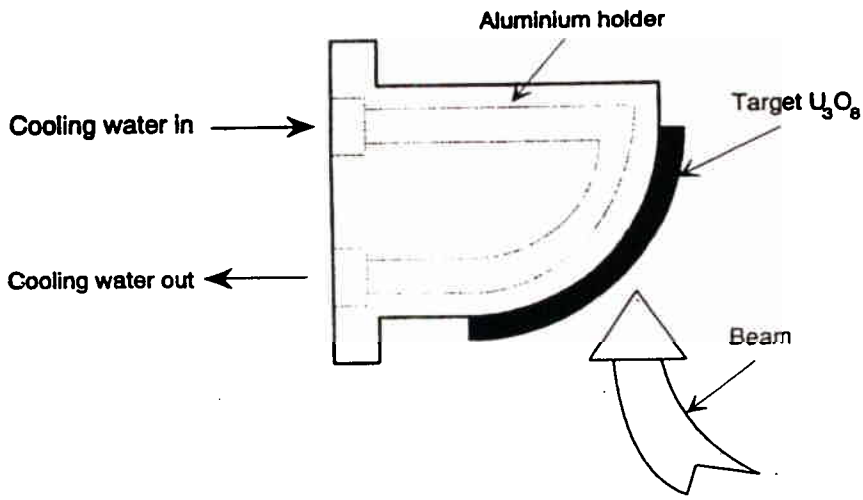

Fig .1 Target chamber for production of ^{237}Pu.

The yield of ^{237}Pu after mass-separation was 40%. The ratio of Pu isotopes was 2 10^{-7} ($^{236}Pu/^{237}Pu$) and 10^{-7} ($^{238}Pu/^{237}Pu$) [3]. This ^{237}Pu preparation is the purents reported today. The preparation was used by Prof. Newton et al. (Harwell Lab. UK) in this matobolism research in vivo [4].

Pu-236.

Our interest to the production of ^{236}Pu is based on the fact that it is a very suitable tracer for the analysis of ^{238}Pu in the analysis of ^{238}Pu and $^{239+240}Pu$ in enviromental samples by alpha-spectrometry.

For determination of the ratio of the activities $^{238}Pu/^{239+240}Pu$, which indicates the origin of Pu contamination, only isotopically high pure ^{236}Pu must be used. The scheme of the production for ^{236}Pu was similar to the one for Pu-237, but the ^{4}He-ions energy was 36 Mev.

After mass-separation the ^{236}Pu preparation with ^{238}Pu content less then 5 10^{-5} (Bq/Bq) was obtained.

Al-26.

The work on ^{26}Al was also initiated by our colleagues from the Harwell Laboratory (UK) with the aim of studying the metabolism of aluminium in human [5].

The possible toxicity of aluminium in the human body is causing world-wide concern. In particular, it is speculated that Al may be a causative agent in Alzheimer's Disease. The reason for the present situation, when the metabolism of such a widely used element is not yet sufficiently studied is the absence of preparations which are convenient for control. Natural aluminium is usually a mno isotopic ^{27}Al. Among radioactive isotopes only ^{26}Al is not a short-lived one - the half-lives of the rest are seconds and minutes. But ^{26}Al is so long-lived ($T_{1/2}$7.2 10^5 y) that the task of producing it in the amounts sufficient for radiometric control in the course of metabolism research is practically unreal.

Only recently, with the development of accelerator mass spectrometry it has become possible to control the behaviour of Al using small amounts of Al-26. For a cycle of research one

needs =5 microgram of Al-26, i.e. 5 kBq. And we have set before us the task of producing just this amount of this isotope.

For the production of Al-26 we used the reaction $^{24,25}Mg(^{4}He,pxn)^{26}Al$. The cross section of this reaction estimated by Tanaka et.al. [6] equals ca 160 mb. A simple calculation shows that for the production of 5 kBq of ^{26}Al(1.5 10^{17} nucl) the total integral of 6 10^{20} nucl (^{4}He) is required. ^{26}Al used for human injections should be of high radiochemical purity and should contain a minimum quantity of stable ^{27}Al. Only high pure Mg but not its alloys can be used for the purpose.

It should be noted that the task of creating a Mg target which can be used at irradiation with high ion beam current turned to be a very difficult one. The scheme of the target block is shown in Fig.2. A plate with the size 100 x 50 mm made of magnesium with 99.95% purity served as a target. The content of stable isotope Al-27 did not exceed 0.01%. The plate was used the top cover of the target array and during irradiation it was cooled directly with running water.

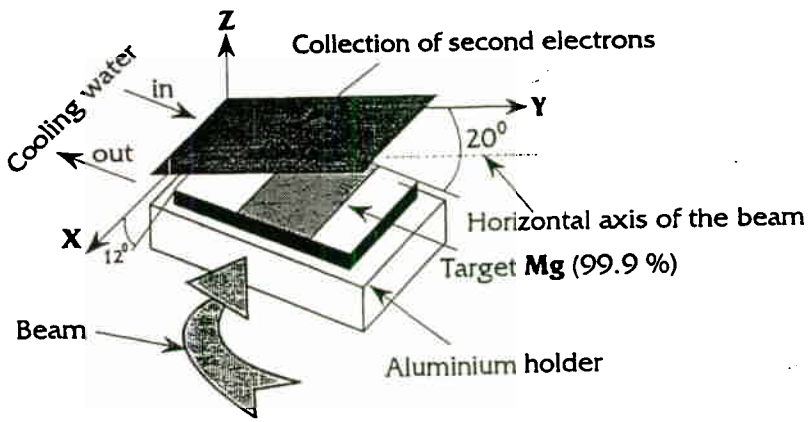

Fig. 2. Target chamber for production of ^{26}Al.

The target array was installed on the external radius of the accelerator, i.e. the internal beam was used. The decrease un the heat load was achieved by the increase of the area of target interaction with the beam due to its inclination in two planes opposite to the beam. Inclination of the target in the direction of the beam lead to the increase of the beam projection over the plate width. The initallation of the target below and above the median plane lead to the situation when during one turn the target absorbed not he whole of the beam but only its lower part. The complete absorption of the beam was observed in the segment 4 cm which corresponds to 10 turns of the beam. One beam turn corresponds to 0.25 MeV, i.e. the initial energy of $^{4}He^{+}$ ions changed along the length of the target from 32.5 to 35 MeV. Upon the whole, the size of the irradiated target was 4x3 cm. The first experiments showed that at an average current of 80 A of $^{4}He^{+}$ the optimum irradiation for the target lasts from 100 to 120 hr, the increase of the exposition to 150 hr lead in a number of cases to the destruction of the surface. The following parameters were chosen as working ones: average current 80 A, time of exposition 100 hr. Under these conditions we have irradiated 5 targets. After cooling the targets for 1 month a layer of ca 0.25 mm was cut off the irradiated surface. The mass of the Mg chips cut off from one plate was 1 g. The chips were dissolved in HNO_3 and the extraction of ^{26}Al was carried

out.Experiments on the extraction of ^{26}Al are not finished yet. For the time being only two out of 5 irradiated plates have been treated. The activity of ^{26}Al in obtained preparations was estimated to be equal to 2.1 kBq.
By the end of the year we intend to develop a method of producing high pure ^{235}Np and ^{209}Po. For the production of ^{235}Np we plan to use the reaction $^{235}U(d,2n)$ and for the production of ^{209}Po - the reaction $^{209}Bi(d,2n)$.
The purity of ^{235}Np will be ensured by the use of super enriched ^{235}U(99.993%). To produce high pure ^{209}Po we shall need an additional purification with a mass separator.
By the end of the year we intend also to continue the production of high pure ^{237}Pu, ^{236}Pu and ^{26}Al. In case of ^{237}Pu we regard our method as an optimum one and we are not going to change it. As for the tasks of producing ^{236}Pu and ^{26}Al, we would like to combine them. Now we are working on the creation of a sandwich-type target Mg-Au-U - a magnesium plate which is electrolytically protected by gold with a layer of U_3O_8 applied to the surface. The irradiation is planned to be carried out in the same geometry as in the case of ^{26}Al. The initial energy of $^{4}He^{+}$ ions 32.5-35.0 MeV is quite enough to create optimum conditions both for the reactions $^{235}U(^{4}He,3n)$ and $^{24,25}Mg(^{4}He,xn)$.
For the next year the U-200 remains the basic accelerator for our radioisotopic research. Certain new possibilities will appear with start-up of the new accelerator U-400M scheduled for the end of 1993 [7].

References

1. Oganessian Yu.Ts. et al. Atomnaya Energiya, v.4, p.271, (1990).

2. Newton D., Warner A.J., Talbot R.J. Nature et al. v.347, p.521, (1990).

3. Dmitriev S.N. et al. Int. J.Appl. Radiat. Isot. v.44, p.1097-1100 (1993).

4. Warner A.J., Talbot R.J., Newton D., Nature, in press.

5. Priest N.D., Newton D., Talbot R.J. Proceedings of the Second Int. Conference on Aluminium and Health. (J.H.Gitelman, Editor), Washington Aluminium Association (1992).

6. Tanaka S. et al. J.Inorg. Chem., v.37, p.2002, (1975).

7. Gulbekian G.G. et al. Scientific Report 1991-1992, Dubna, JINR, E7-93-57, p.273 (1993).

ESTABLISHMENT OF AN EUROPEAN ASTATINE COLLABORATION

Regin Weinreich

Institute of Medical Radiobiology
Universität Zürich and Paul Scherrer Institute
CH-5232 Villigen-PSI, Switzerland

Introduction

^{211}At is an extremely radiotoxic nuclide. It decays with a half-life of 7.2 hrs by emission of (on average) one α-particle and a number of Auger and Coster-Kronig electrons per decay. The maximum range of the α-particles is 80 μm, consequently a few cell diameters. In the last years, the general interest in astatine labelled compounds for radionuclide therapy has been reinforced:

- Studies of the radiobiological behaviour of ^{211}At in cell culture experiments confirmed clearly its usefulness for radiotherapeutic applications [1,2].
- Astatine compounds have been found which are relatively stable and useful as linkers between the nuclide and carrier proteins [3-7].
- A clinical study using ^{211}At-Methylene blue as radiotoxic substance as well as tumour-seeking ligand is now under consideration [8].

On the other hand, the low availability of the nuclide is still the most important limitation for a broader clinical application:

For production of this nuclide, α-particles of 28 MeV are needed [9]. These particles are mostly generated in medium-energy multi-particle accelerators of variable energy. Such accelerators, however, are generally used by different research groups with different research aims and consequently different beamtime modes.

For a dedicated long-term research program in chemistry of astatine compounds, however, normally not enough production runs in a single institute are available. Thus, the astatine research is carried out normally by a limited number of PhD theses and not on a systematic long-term program of a larger research group.

When clinicians are involved in this work, their rigid scheduling needs, in connection with handling of patients, increase further the problems with availability. In preliminary estimations, therapeutic activities of ^{211}At, 50 mCi are discussed. Such activitiy figures, perhaps would be too much for a single production facility

To overcome the availability problem, we tried to put together a number of cyclotron stations able to produce ^{211}At and willing to push the astatine research. The high number of potential producers should reduce the availability problem by filling beamtime gaps by deliveries of other producers. The standardization of production and labelling procedures by know-how transfer could be a further advantage for the user and should consequently lower the cost of the production process and consequently for the patient treatment.

Production of ^{211}At

^{211}At is commonly produced by the nuclear reaction

$$^{209}Bi(\alpha,2n)^{211}At$$

at α-particle energy of 28.0 MeV. The excitation functions measured by Lambrecht and Mirzadeh [9] have been remeasured and generally confirmed [10]. At 28.0 MeV, the yield of ^{211}At by this reaction is 0.53 mCi (19.6 MBq)/µAh, and the amount of ^{210}At contaminant (which decays to the long-lived α-emitter 138-d ^{210}Po) is of negligible importance.

Yield and purity must be optimized, thus it should be possible to obtain a purity grade of 99.999 % easily (a sample recently delivered from Dresden showed 4×10^{-6} % ^{210}At only). The exact radiotoxicity of ^{211}At is not yet known, but we expect to get more information about this topic by means of model calculations performed at the Institute of Medical Radiobiology in Zurich and Villigen [11].

Technically, bismuth metal covered on a tantalum plate is irradiated, if possible under a small angle against beam direction. The ^{211}At formed by this nuclear reaction, is separated by thermochromatography and is collected in a solvent [4,9,12,13].

Another production process, stemming from high energy proton spallation of uranium or thorium [14] may not yield a product of the same purity grade.

Facilities of the potential cooperation partners*)

The **Paul Scherrer Institute in Villigen,** Switzerland, has a Philips multiparticle cyclotron ("Injector I") of variable α-particle energy up to 120 MeV. In the past, this cyclotron had produced almost exclusively protons useful as source for the 590 MeV Ring cyclotron, no α-particle beamtime for isotope production was available. In the meantime, however, the ring cyclotron was fed by the single-particle fixed energy machine Injector II, and Injector I is used for other purposes as well. The Paul Scherrer Institute is well-equipped with all installations for handling radioactive materials, including boxes for α-emitters.

CCR Ispra, Italy, has a modern variable energy cyclotron MC 40 of Scanditronix (Maximum α-particle energy 40 MeV). This cyclotron is part of the Institute of Advanced Materials, with a large amount of beamtime available for purposes of material and solid state research. For a short time, however, the institute spent more beamtime for isotope production. CCR is well-equipped with laboratory installations, also for handling α-emitters but has no chemistry group for carrying out more ambitious labelling work. The group is able to perform thermo-chromatographic separation of astatine from the irradiated target material.

The **Technical University Dresden,** Germany, has had great experience (since the late seventies) in production and labelling of ^{211}At. The group produces the nuclide on a Russian Variable energy cyclotron U 120 (maximum α-particle energy 28 MeV), located in Rossendorf nearby. The chemistry laboratories are partly located in Rossendorf, partly in Dresden. From equipment, know-how and the medical infrastructure (Medizinische Akademie C. G. Carus), Dresden is able to develop and to produce labelled astatine compounds and to perform clinical studies. The cyclotron is used almost exclusively for isotope production. Dresden has already carried out a study of a tumour patient with ^{211}At-labelled microspheres.

The **Universitätsklinikum Essen,** Germany, has a CV 28 cyclotron of CTI which is able to produce a sufficient current of 28 MeV α-particles. The machine is used for production of ^{123}I and PET radioisotopes and for neutron therapy, including preclinical studies in boron neutron capture therapy. Because of regulatory limitations, Essen can produce ^{211}At, but not handle it. Consequently, Essen will distribute irradiated targets.

The **Institute of Experimental and Theoretical Physics, Moscow,** Russia, has no own production cyclotron, but it coordinates all Russian activities in the astatine field concerning this planned cooperation.

*) During the V. International Workshop on Targetry and Target Chemistry, interest in a collaborative program has been shown also from groups in Karlsruhe, Germany, (Dr. Bechtold) and Jyväskylä, Finland, (Mrs. Dr. Kumpulainen).

Conclusions

The systemic treatment of micrometastases by ^{211}At-labelled radiotherapeutics is understandably complementary to the use of external radiotherapy of tumours. In the near future, the radionuclide therapy by emitters of short-ranged particles will be a necessary supplement to conventional radiation therapy.

We feel that such a network is the only way to establish an efficient transfer mechanism from research laboratories into hospitals in order for ^{211}At and its labelled compounds to be available for clinical use. All the participants of this network agree fully with this basic statement. The consent to coooperate was overwhelming.

This project can be solved only in a very close collaboration within Europe. From logistic considerations, an extension to the United States and Canada is not possible.

In the first stage, this network should be in the form of a scientific cooperation with benefit for all participants. In a later stage, also commercial aspects should be considered.

To bring this network into operation, the EEC is asked for support. This support should include occasional visits of the participating scientists in order to standardize the procedures and to check the progress. It should include further an amount for covering the transportation costs of the ^{211}At-labelled compounds. This support should be stopped when the project gets commercialized.

References

[1] W.H. McLaughlin, W.M. Thramann, Jr., R.M. Lambrecht, R.A. Milius and W.D. Bloomer: Preliminary observations of malignant melanoma therapy using radiolabeled alpha-methyltyrosine. J. Surg. Oncol. 37, 192-197 (1988).

[2] E.M. Link, I. Brown, R.N. Carpenter and J.S. Mitchell: Uptake and therapeutic effectiveness of ^{125}I- and ^{211}At-methylene blue for pigmented melanoma in an animal model system. Cancer Res. 49, 4332-4337 (1989).

[3] G. Wunderlich, S. Fischer, R. Dreyer and W.G. Franke: A simple method for labelling proteins with ^{211}At via diazotized aromatic diamine. J. Radioanal. Nucl. Chem., Letters 117, 197-203 (1987).

[4] Yi Changhou, Jin Jannan, Zhang Shuyuan, Wang Ketai, Zhang Dayuan and Zhou Maolun: Astatine-211 labelled proteins and their stability in vivo. J. Radioanal. Nucl. Chem, Articles 129, 377-385 (1989).

[5] M.R. Zalutsky, P.K. Garg, H.S. Friedman and D.D. Bigner: Labeling monoclonal antibodies and $F(ab')_2$ fragments with the α-particle-emitting nuclide astatine-211: Preservation of immunoreactivity and *in vivo* localizing capacity. Proc. Natl. Acad. Sci. USA 86, 7149-7153 (1989).

[6] E.M. Link and R.N. Carpenter: ^{211}At-Methylene blue for targeted radiotherapy of human melanoma xenografts: Treatment of micrometastases. Cancer Res. 50, 2963-2967 (1990).

[7] G. Vaidyanathan and M.R. Zalutsky: 1-(m-[^{211}At]Astatobenzyl)guanidine: synthesis via astato demetalation and preliminary in vitro and in vivo evaluation. Bioconj. Chem. 3, 499-503 (1992).

[8] E.M. Link (London): personal communication (1993).

[9] R.M. Lambrecht und S. Mirzadeh: Cyclotron isotopes and radiopharmaceuticals - XXXV. Astatine-211. Int. J. Appl. Radiat. Isotopes 36, 443-450 (1985).

[10] R. Weinreich, K. Casteleyn, B. Weckermann and B. Larsson: Production of ^{211}At for therapy of micrometastases. PSI Life Sci. Newsl. 1992, 117.

[11] J. Stepanek, D. Knespl, B. Larsson and R. Weinreich: Radiation spectra of radionuclides. To be published.

[12] F. Rösch, J. Henniger, G.J. Beyer and R. Dreyer: Optimization of bombardment conditions of the ^{209}Bi /α,2n/ cyclotron production of ^{211}At. J. Radioanal. Nucl. Chem., Letters 96, 319-332 (1985).

[13] M.R. Zalutsky and A.S. Narula: Astatination of proteins using an N-succinimidyl tri-n-butylstannyl benzoate intermediate. Appl. Radiat. Isotopes 39, 227-232 (1988).

[14] V.M. Vachtel, G.V. Vinel, Z. Vylov, N.I. Gromova, A.F. Novgorodov, Yu.V. Norseev, V.G. Tschumin and V.A. Khalkin: A gas chromatographic method for separation of astatine. Separation of astatine isotopes from uranium (in Russian). Isotopenpraxis 12, 441-446 (1976).